THREE PHASE

STORAGE INVERTER

QUICK INSTALLATION GUIDE

ISSUE: V1.4

DATE: 2026-4-28

CSA SOLAR CO., LTD

Notice

1. The information in this document may not be modified, copied or reproduced, in whole or in part, without the prior written permission of Csa Technology. All information in this document is provided to the best of our knowledge and efforts, but does not constitute a warranty of any kind, express or implied. You can download quick guide and user manual by scanning the QR code.
2. Only certified electricians are allowed to operate the device. Operation personnel must wear proper personal protective equipment (PPE).
3. Before installing the device, check that the package contents are intact and complete against the packing list. If any damage is found or any com- ponent is missing, contact your dealer.
4. The device damage caused by the violation of instructions in this docu- ment is not covered under warranty.
5. The cable colors involved in this document are for reference only. Select cables in accordance with local cable specifications.

1 Packing List

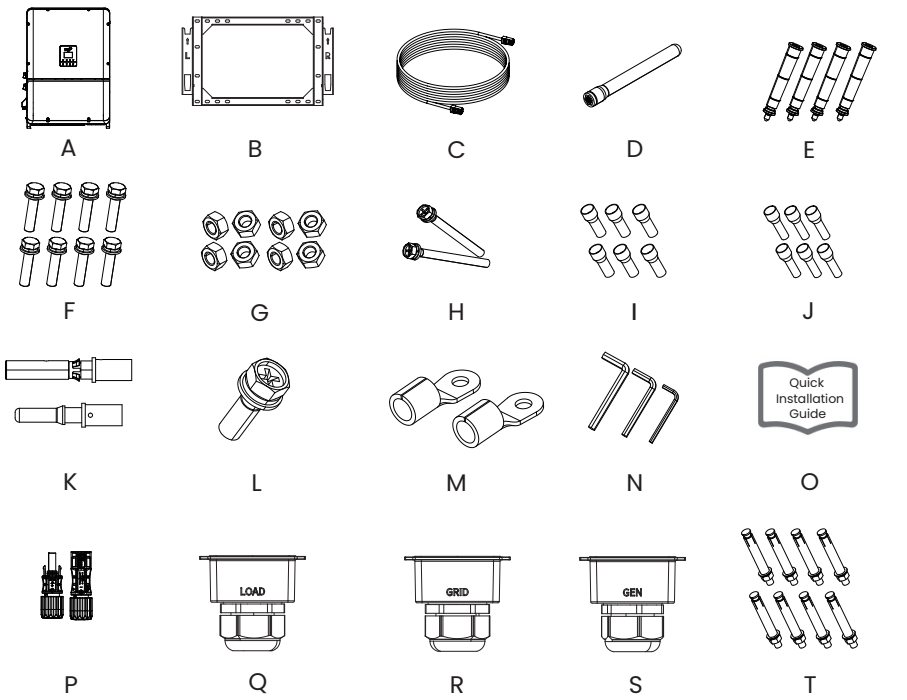

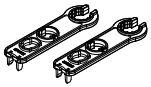

U

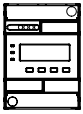

V

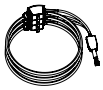

W

X

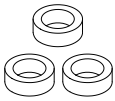

Y

OBJ	QTY	DESC	OBJ	QTY	DESC
A	1	Inverter	B	1	Hanging Plate
C	1	Meter Communication Cable	D	1	Antenna
E	4	Screw-in Type Handle	F	8	M10 × 45 Bolt Assembly
G	8	M10 Hexagon Nut	H	2	M6 × 65 Bolt Assembly
I	6	25 mm² Tube-type Cold-pressed Terminal (for CQ6 & CQ7 Batteries)	J	6	16 mm² Tube-type Cold-pressed Terminal (for CQ16 Battery)
K	16/32	DC Pin Plug (4 MPPT: Positive × 8, Negative × 8; 8 MPPT: Positive ×16, Negative × 16)	L	12	M5 × 16 Bolt Assembly
M	2	Ground Terminal	N	3	5 mm & 8 mm & 10 mm Internal Hexagon Wrench
O	1	Quick Installation Guide	P	16/32	DC Connector (4 MPPT: Positive × 8, Negative × 8; 8 MPPT: Positive ×16, Negative × 16)
Q	1	Load Cable Grommet	R	1	Grid Cable Grommet
S	1	Generator Cable Grommet	T	8	M10 × 100 Expansion Bolt
U	2	DC Connector Removal Tool	V	1	Meter
W	1	CT	X	1	Big Magnetic Ring (for Battery Power Cable)
Y	3	Small Magnetic Ring (for BMS Communication Cable)			

2 Required Tools

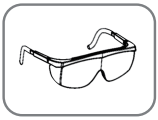
Safety Goggles

Steel Toe Boots

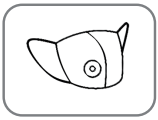
Dust Mask

Helmet

Insulating Gloves

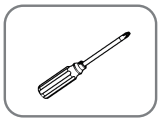
Phillips-Head Screwdriver

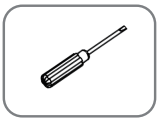
Flat-Head Screwdriver

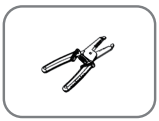
Wire Stripper

Electric Drill

Adjustable Wrench

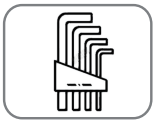
Hex Wrench Set

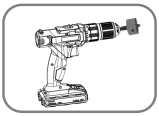
Hole Punch

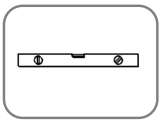
Level

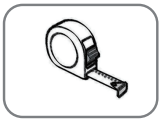
Tape

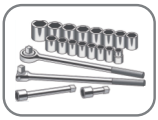
Sleeve

Multimeter

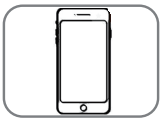
Phone

DANGER:

Special care must be taken to protect personal safety.

PPE must be worn during transfer and installation.

WARNING:

Please use proper protective measures, such as foam or protective cloth, keep the equipment well protected from hard objects that may damage their exterior appearance or body during handling and installation.

---

3 Inverter Installation

3.1 Installation Environment

Please make sure the inverter will be installed with a proper distance as shown below.

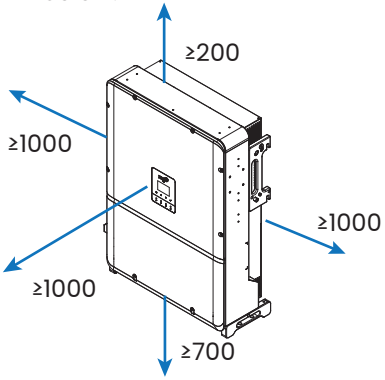

Position	Min Size
Left	1000 mm
Right	1000 mm
Top	200 mm
Bottom	700 mm
Front	1000 mm

3.2 Installation Steps

Install the Inverter on a bracket or wall by means of the hanging plate. The size of the hanging plate is shown as below:

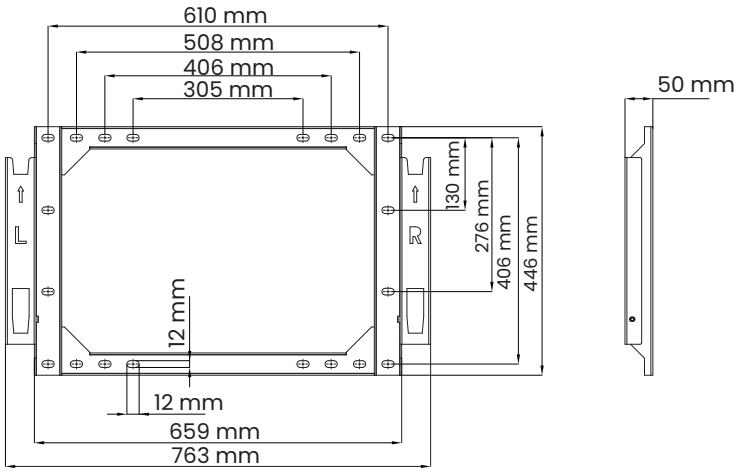

Step 1: Bracket-mounted or Wall-mounted Installation

Method 1: Bracket-mounted Installation

1. Place the hanging plate on a PV bracket, adjust the angle with a level, mark drilling positions, and drill holes with an electric drill (with a φ12 drill bit).

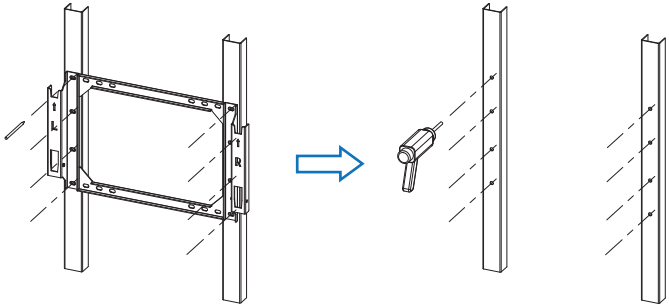

2. Fix the hanging plate with bolts.

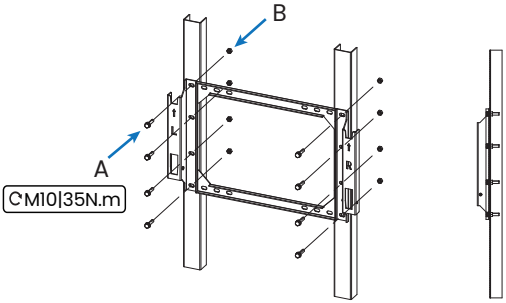

A: 8 PCS of M10 × 45 hexagon bolts
B: 8 PCS of hexagon nuts

Method 2: Wall-mounted Installation

1. Place the hanging plate at the installation site, adjust the angle with a level, and mark drilling positions.

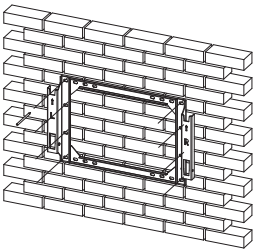

2. Drill holes with a hammer drill (with a φ12 drill bit), clear holes, insert 8 PCS of expansion bolts (M10 × 100) into holes, and fix them with a rubber hammer.

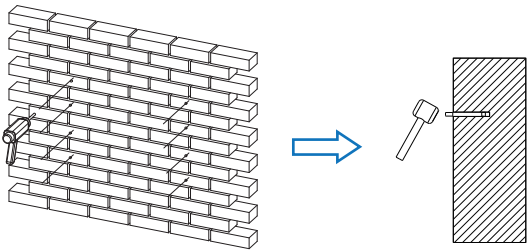

3. Fix the hanging plate with expansion bolts.

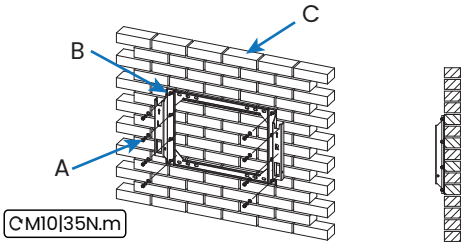

A: 8 PCS of M10 hexagon nuts
B: 8 PCS of expansion bolts (M10)
C: Wall

Step 2: Inverter Installation

1. Lift the inverter from the package box with 4 PCS of screw-in type handles.

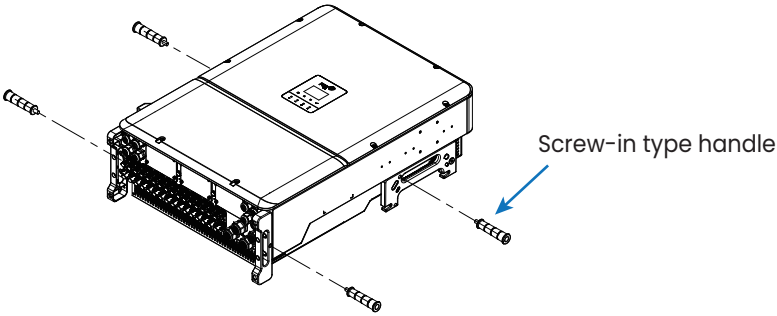

2. Install the inverter on the hanging plate, and ensure that lugs of the inverter are properly matched with slots of the hanging plate.

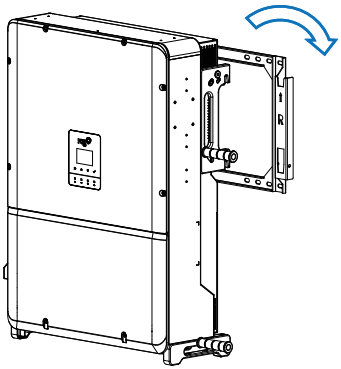

3. Secure the inverter with bolts.

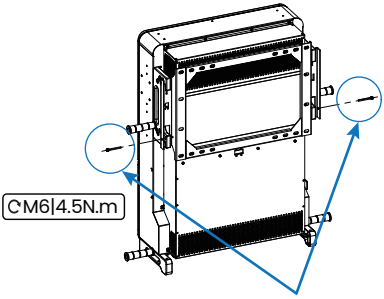

2 PCS of M6 × 65 bolts

4 Electrical Connection

4.1 Secondary Ground Connection

Lock crimped ground cables to ground holes with screw locks on the inverter case, and paint the ground screws and ground terminals to improve anti-corrosion characteristics.
The conductor sectional area of each ground cable is 25–50 mm² (30–35 mm² is recommended).

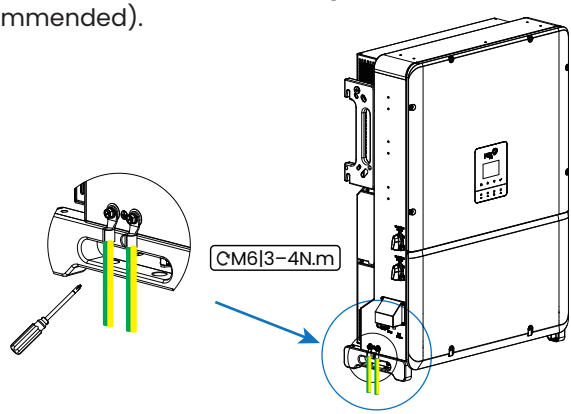

4.2 DC Side Connection

1. Turn off the DC switch.

2. It is recommended that the DC cable dedicated to photovoltaics (4–6 mm²) be used to connect the PV module.

3.Trim about 6 mm of insulation from the cable end.

4. Separate the DC connector as below.

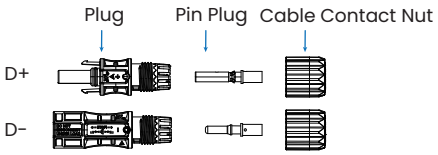

NOTICE

To ensure the reliability of the DC cable connection and the stable operation of the machine, it is essential to use the matching DC connector.

5. Insert multiple cables connected to the PV module into the pin plug and ensure all strands are captured in the pin plug.
6. Crimp the pin plug with a crimping plier.

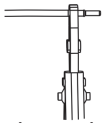

7. Route the crimped cable through the nut into the plug. When you hear a "click", the pin plug is properly clamped in the plug.

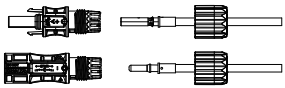

4.3 AC Side Connection

Recommended Specification:

Cable Type	Outer Diameter (mm)	Copper Conductor Sectional Area (mm^2)
LOAD/GRID/ GEN Cable	25–66	L1,L2,L3,(N) cables: 90–150 PE: S/2 (S is a sectional area of LOAD/GRID/GEN phase cable)

NOTICE

1. Select cables of different specifications based on the actual on-site load and power demand. Ensure that the cable cross-sectional area meets the actual current-carrying capacity requirements.
2. Do not strip or cut cable wires inside or near the lower enclosure. Before routing multi-core cable wires into the lower enclosure, check and remove any broken or damaged cable strands at the cable ends. Loose strands may fall into the enclosure and cause a short circuit.

1. Open the lower enclosure with a 5 mm internal hexagon wrench. Open the breaker and prevent accidental reclosing. Use a Phillips screwdriver to remove the bottom cover for wiring, and keep the removed screws for subsequent installation of the connection box.

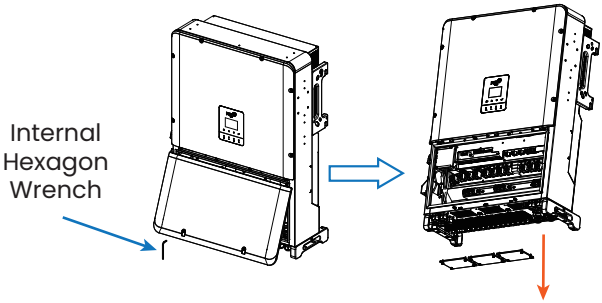

2. Pass the independent grounding wire through the cable gland COM8, insert it into the grounding connector, and tighten it with a 8 mm internal hexagon wrench.

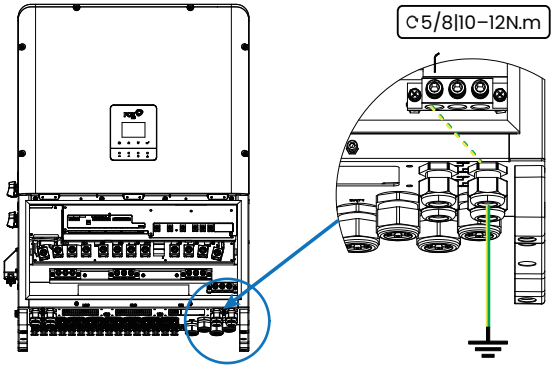

3. Strip the cables' insulation layers. Then select appropriate threading seals based on the cables' outer diameters and thread them through the gland covers.

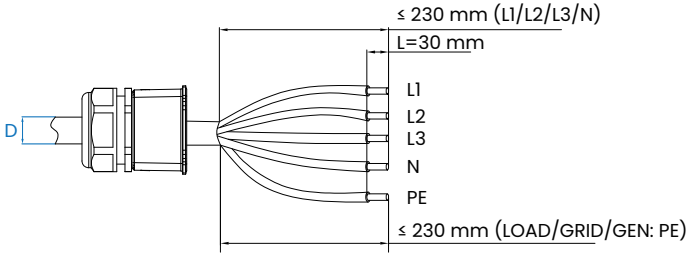

Cable Gland Diameter Range

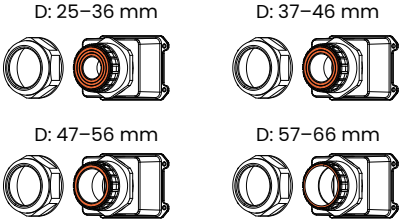

4. Pass the LOAD/GRID/GEN cables through the corresponding cable glands in the enclosure and tighten them to the respective terminals with 8 mm and 10 mm internal hexagon wrenches. Then, secure the cable grommets to the enclosure with M5 × 16 screws with a screwdriver.

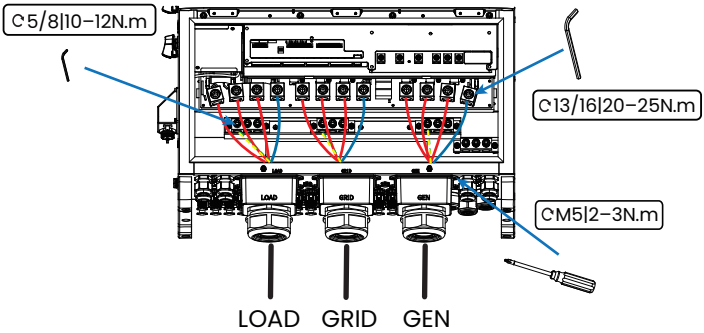

4.4 Battery Side Connection

Strip the cables' layers. Thread the battery power cables and the battery communication cables through the corresponding cable glands. Then, lock the battery power cables to the corresponding terminals with a 5 mm internal hexagon wrench and plug the battery communication cables into the corresponding communication interfaces.

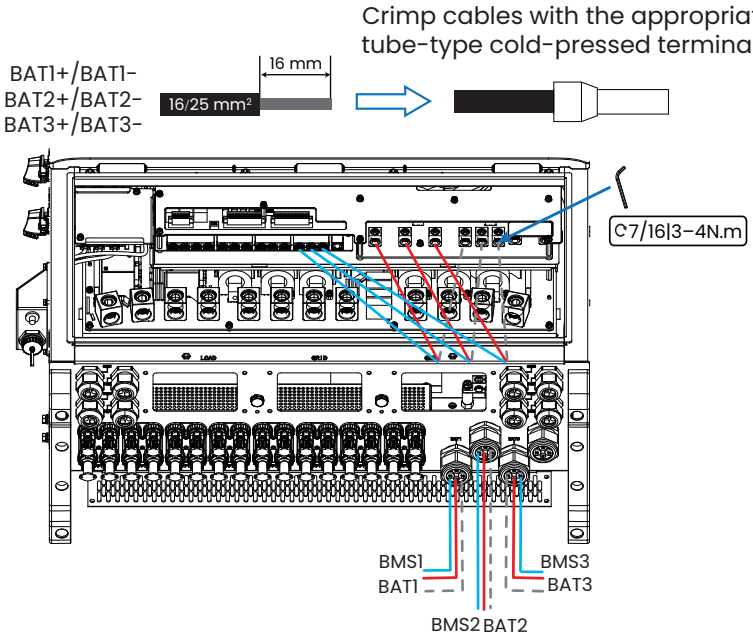

4.4.1 Battery Connection

Method 1: Parallel Mode

The inverter's three battery ports (BAT1, BAT2, BAT3) are connected to the three power ports of the same CQ16 battery high-voltage control box. The BMS communication cable of this control box is connected to BMS1 terminal on the inverter.

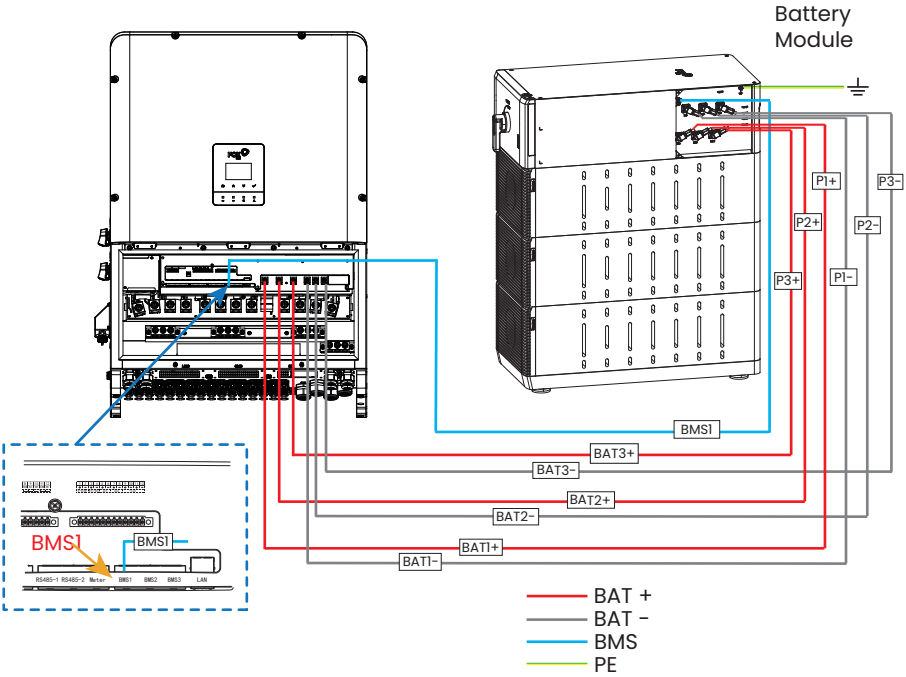

NOTICE

At present, only the CQ16 battery is equipped with three sets of power ports. Therefore, all other batteries do not support Parallel Mode.

Method 2: Hybrid Mode

Battery modules are connected to the inverter with a combination of parallel and independent connections.

Battery Module 1 is connected to the inverter via 2 parallel battery strings. Specifically, two battery modules are connected in parallel and interfaced with the inverter through 2 sets of DC power cables (BAT1+/BAT1- and BAT2+/BAT2-).

Battery Module 2 is connected to the inverter as a single battery string, using 1 set of DC power cables (BAT3+/BAT3-).

2 BMS lines (BMS1 & BMS3) are directly connected to the inverter to allow individual monitoring and control.

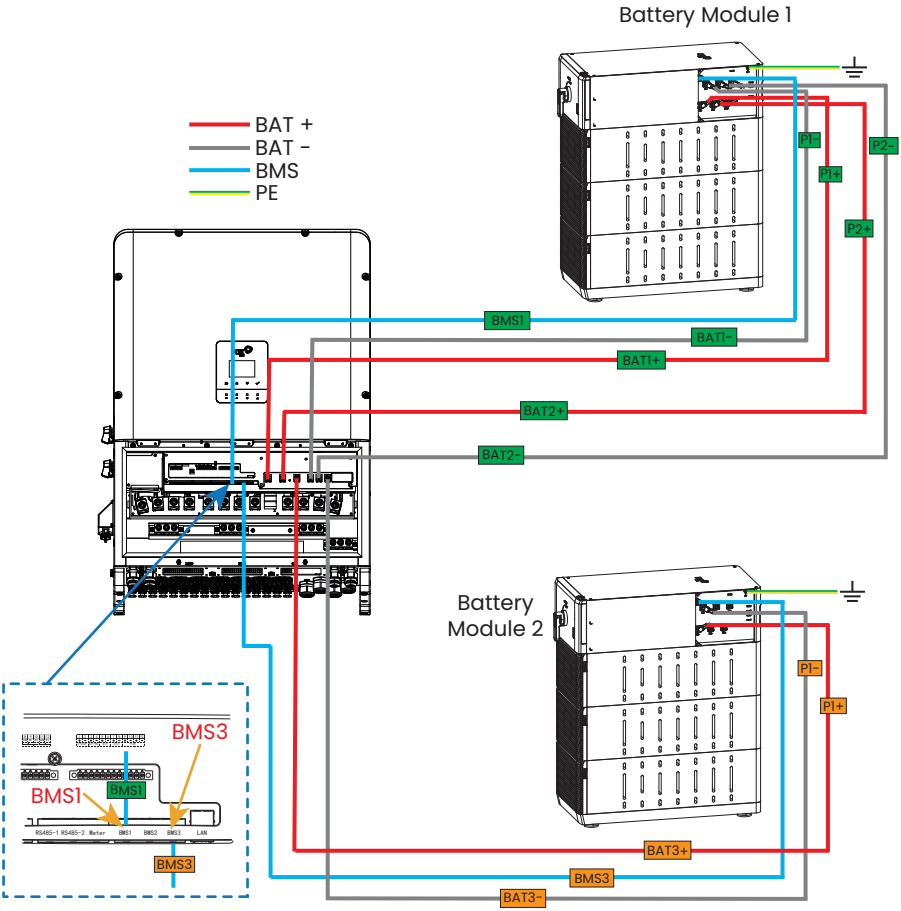

Cable Groups	
for Battery Module 1	BMS1, BAT1+, BAT1-, BAT2+, BAT2-
for Battery Module 2	BMS3, BAT3+, BAT3-

Method 3: Independent Mode

Each battery module (BAT1, BAT2, BAT3) is independently connected to the inverter via power cables and dedicated BMS communication lines. All BMS lines (BMS1–BMS3) are directly connected to the inverter to allow individual monitoring and control.

Warning:

For each battery module connected to the inverter, the power cables and BMS cable shall be routed from the same battery stack. Cross-mixed wiring will result in abnormal operation.

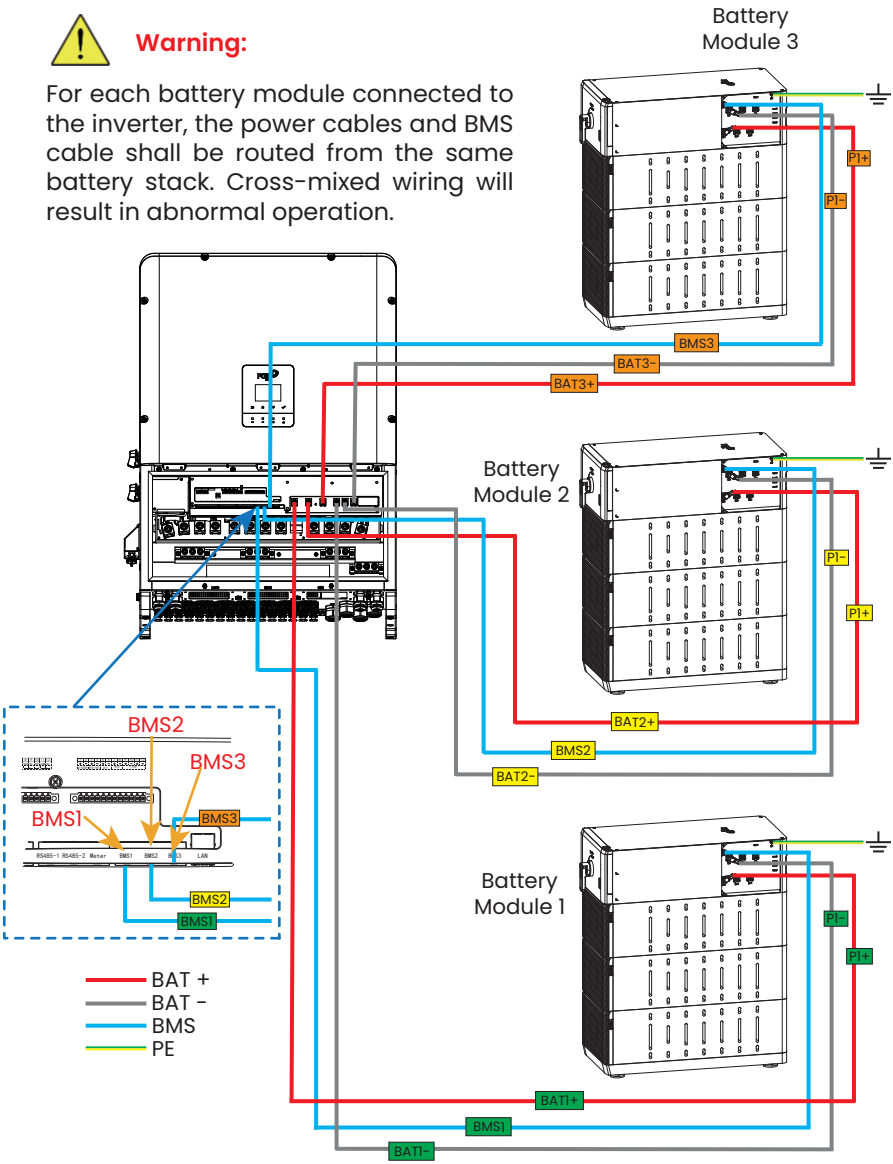

Cable Groups	
for Battery Module 3	BMS3, BAT3+, BAT3-
for Battery Module 2	BMS2, BAT2+, BAT2-
for Battery Module 1	BMS1, BAT1+, BAT1-

NOTICE

The inverter can be connected to 1, 2, or 3 battery modules. The diagram above illustrates the wiring example for connecting 3 battery modules.

4.4.2 Battery Configuration

Step 1: Click the icon on the upper right side.

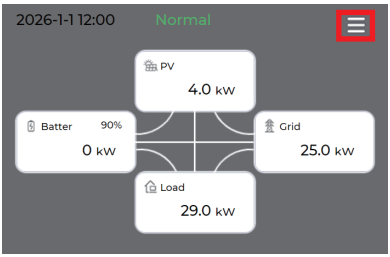

Step 2: Click “Setting”.

Step 3: Enter password (0000).

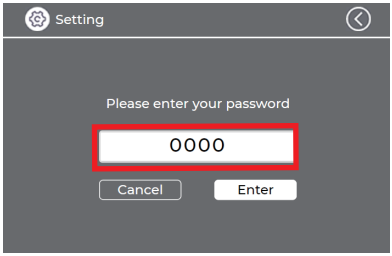

Step 4: Click “Battery”.

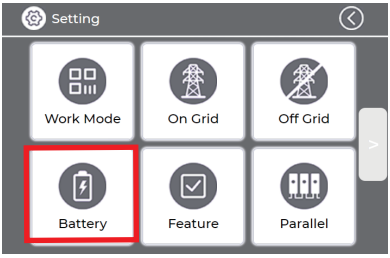

Step 5: Select "Battery Connect Mode" based on battery connection mode:
Parallel Mode: Select “SBC1, SBC2 and SBC3 in parallel”
Hybrid Mode: Select “SBC1 and SBC2 in parallel”
Independent Mode: Select “Independent (default)”

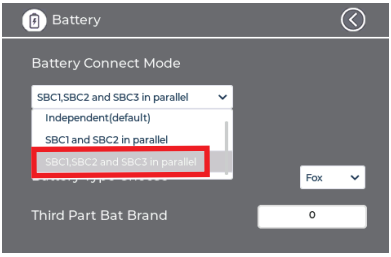

OR

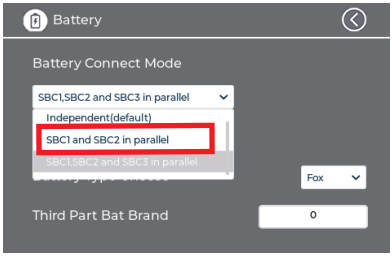

OR

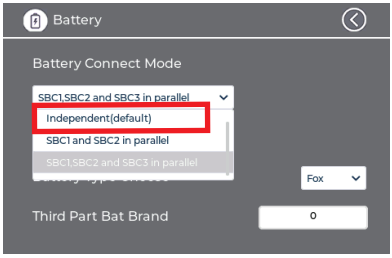

4.5 Meter Connection

Grid Meter Connection

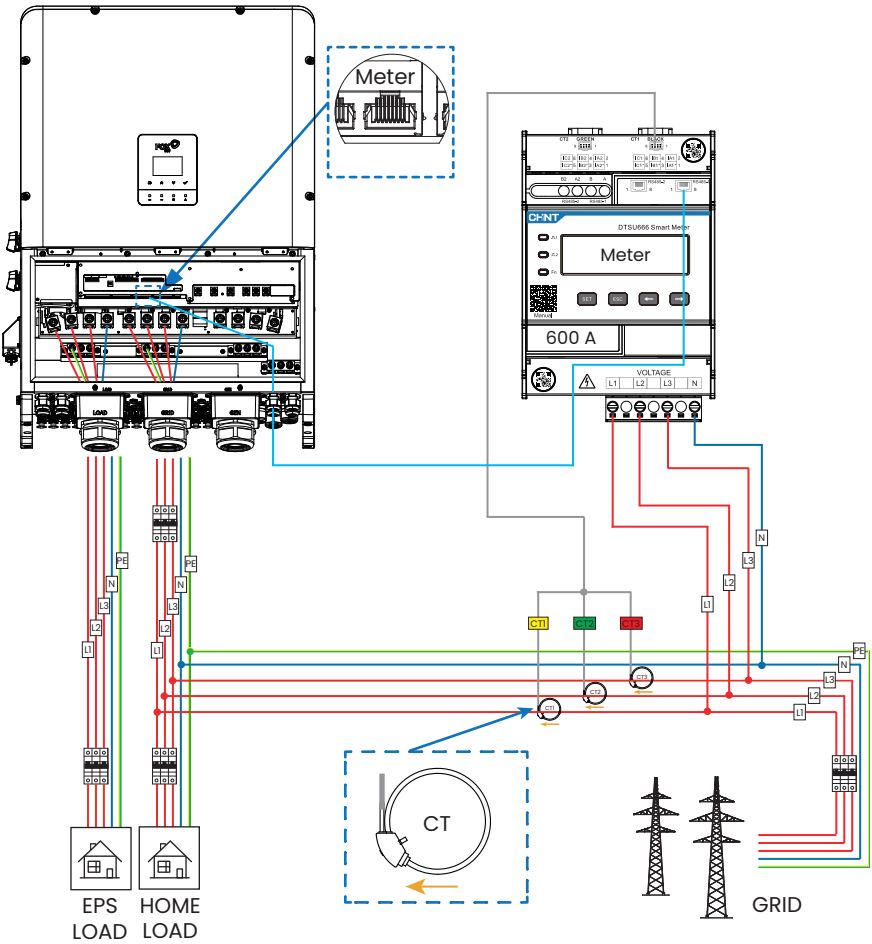

NOTICE

The inverter is equipped with a 600 A CHNT smart meter, which must only be used with the CT supplied in the accessory kit. Do not use CTs of other models, as this may result in operational failures.

AC Couple Meter Connection

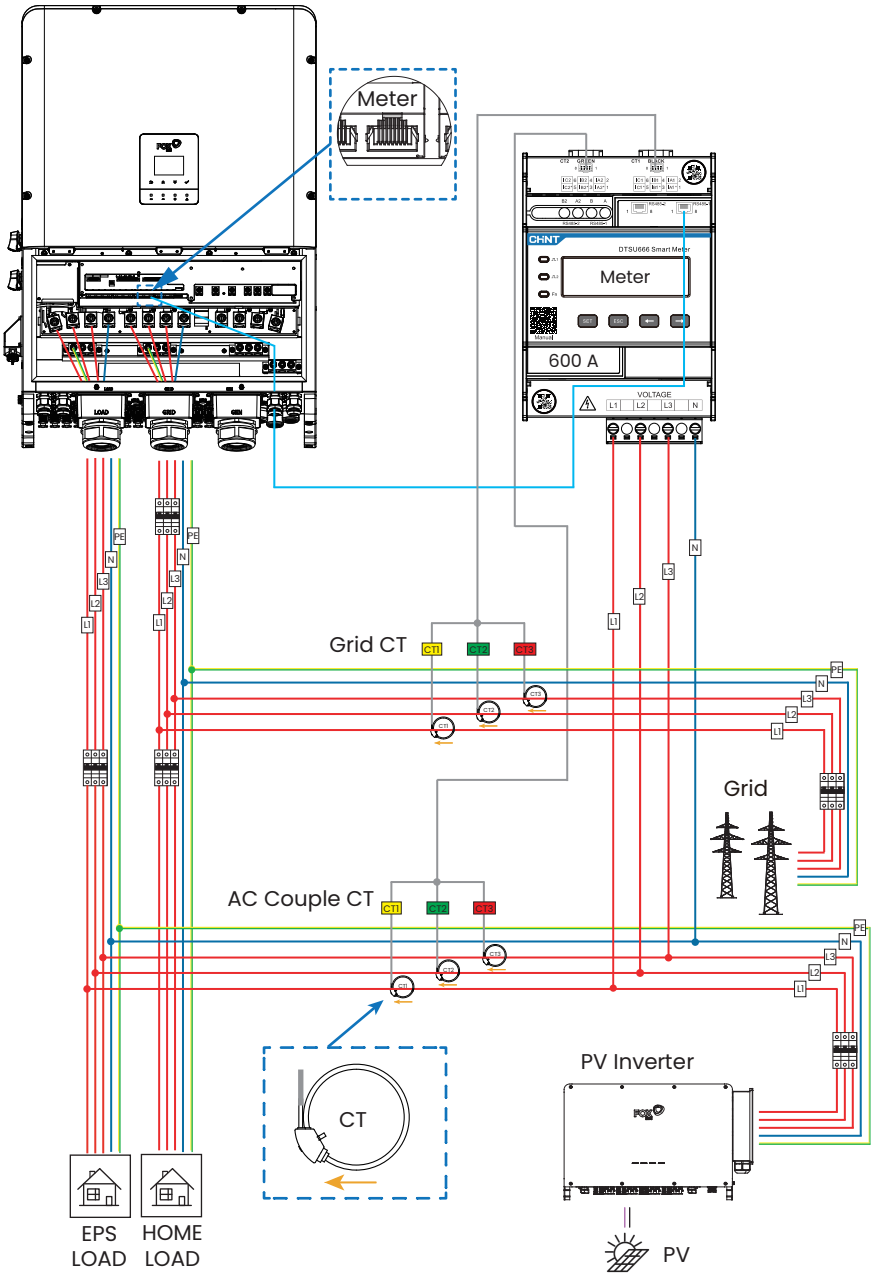

4.6 Antenna Connection

Remove the antenna sealing cap, and screw the antenna into the WiFi antenna port on the inverter.

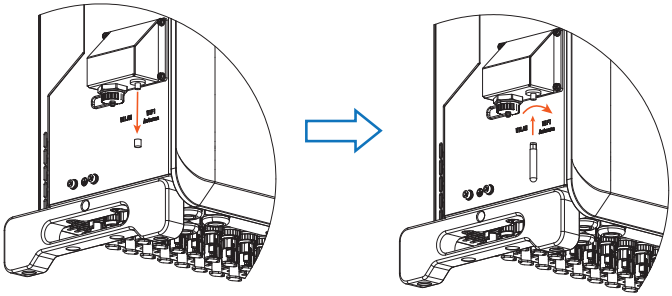

NOTICE

To ensure stable antenna operation, the antenna locking nut must be securely tightened.

5 Startup Procedure

Please follow the steps below to start up the inverter:

1. Ensure the inverter is securely mounted.
2. Confirm that all wiring has been properly completed.
3. Ensure the meter is correctly connected.
4. Ensure the batteries are properly connected.
5. Ensure the load breaker is connected properly (if applicable).
6. Ensure the batteries' Power buttons and switches are turned off.
7. Turn on the PV switch, AC grid breaker, load breaker, and battery breaker. Then, press and hold the batteries' Power buttons for 3 seconds, and release them.

6 App Installation and Internet Configuration

Scan the QR code below to download and install FoxCloud App 2.0. Refer to the guidance to configure the internet.