User Manual

Three Phase Storage Inverter

In order to prevent improper operation before use, please read this manual carefully.

Content

1. Notes on This Manual 3
1.1 Scope of Validity 3
1.2 Target Group 3
1.3 Symbols Used 3
1.4 Symbols Explanation 4
2. Safety Precautions 5
2.1 Unpacking and Inspection 5
2.2 Package Safety 5
2.3 Electrical Connection Safety 6
2.4 Operation Safety 7
2.5 Maintenance Safety 7
2.6 Disposal Safety 8
3. Introduction 9
3.1 Product Introduction 9
3.2 Size 9
3.3 Control Panel 10
3.4 Terminals of Inverter 12
3.5 Circuit Diagram 13
3.6 Backup Options 14
3.7 AFCI Function 16
3.7.1 Function Introduction 16
3.7.2 Alarm Clear 16
3.7.3 AFCI Protection Configuration 18
4. Technical Parameters 19
4.1 PV Input 19
4.2 Battery 19
4.3 AC Input/Output 20
4.4 EPS Output 21
4.5 Diesel Generator Specification 22
4.6 Efficiency and Protection 22
4.7 General Data 23
5. Installation 24
5.1 Installation Safety 24
5.2 Check for Physical Damage 24
5.3 Packing List 24
5.4 Mounting 26
5.4.1 Environment Requirement 26
5.4.2 Space Requirement 27
5.4.3 Angle Requirement 27
5.4.4 Installation Steps 28
6. Electrical Connection 32
6.1 Safety Precautions 32
6.2 Communication Terminal 33

6.2.1 Terminal Description 33
6.2.2 Terminal Pin Description 34
6.3 Secondary Ground Connection 35
6.4 AC Wiring 36
6.4.1 AC Wiring Requirements 36
6.4.2 Wiring Steps 36
6.5 DC Connection 38
6.5.1 PV Configuration 40
6.5.2 Assembling DC Connectors 42
6.5.3 DC Wiring 43
6.5.4 Battery Connection 43
6.5.5 Antenna Connection 55
6.6 Communication Device Installation 55
6.6.1 Monitoring Module 55
6.6.2 Meter Connection 61
6.6.2.1 Grid Meter 61
6.6.2.2 AC Couple Meter 62
6.6.3 Multiple Inverters Connection 63
6.6.4 AC Couple 69
7. Main Function Implementation 70
7.1 Reactive Function Setting 70
7.2 Diesel Generator 73
7.2.1 Generator Wiring 73
7.2.2 Parameters Configuration 74
8. Commissioning 77
8.1 Inspection before Commissioning 77
8.2 Inverter Start-Up 77
8.3 Inverter Switch Off 77
9. Maintenance 78
9.1 Maintenance Safety 78
9.2 Alarm List 79
9.3 Troubleshooting 111
9.4 Routine Maintenance 111
10. Decommissioning 113
10.1 Dismantling the Inverter 113
10.2 Packaging 113
10.3 Storage and Transportation 113

1. Notes on This Manual

1.1 Scope of Validity

This manual describes the assembly, installation, commissioning, maintenance and troubleshooting of the following models of CSA Solar products:

	H3-Plus	P3-Plus
Model	H3-50-Plus, H3-60-Plus, H3-75-Plus, H3-80-Plus, H3-100-Plus, H3-125-Plus	P3-50-Plus, P3-60-Plus, P3-75-Plus, P3-80-Plus, P3-100-Plus, P3-125-Plus
Market	Germany, Austria, the UK, Italy, Australia, and Switzerland	Countries other than Germany, Austria, the UK, Italy, Australia, and Switzerland.
Remark	CSA battery	CSA battery

1.2 Target Group

This manual is for qualified electricians. The tasks described in this manual only can be performed by qualified electricians.

1.3 Symbols Used

This section explains the symbols shown on the inverter and on the type label:

⚠	**Danger!** "Danger" indicates a hazardous situation which, if not avoided, will result in death or serious injury.
⚠	**Warning!** "Warning" indicates a hazardous situation which, if not avoided, could result in death or serious injury.
⚠	**Caution!** "Caution" indicates a hazardous situation which, if not avoided, could result in minor or moderate injury.
☞	**Note!** "Note" provides important tips and guidance.

1.4 Symbols Explanation

This section explains the symbols shown on the inverter and on the type label:

Symbols	Explanation
	CE mark. The inverter complies with the requirements of the applicable CE guidelines.
	Beware of hot surface. The inverter can become hot during operation. Avoid contact during operation.
	Danger of high voltages. Disconnect from the grid and the PV generator before opening the device.
	Danger. Risk of electric shock!
15min	Danger to life due to high voltage. There is residual voltage in the inverter which needs 15 min to discharge. (After disconnecting all external power sources from the inverter, please wait 15 min before you open the cover.)
	Read the manual.
	Product should not be disposed as household waste.
RoHS	This mark indicates that the product meets EU environment protection certification requirements.
	This mark indicates that the product complies with the electrical safety, electromagnetic compatibility, and telecommunications regulatory requirements applicable in Australia and New Zealand.
UK CA	This mark indicates that the product meets the UK's regulatory requirements for safety, health, environmental protection, and other applicable standards.

2. Safety Precautions

This series inverter is designed and tested in accordance with international safety requirements. However, certain safety precautions must be taken into account when installing and operating this inverter. The installer must read and follow all instructions, cautions, and warnings in this installation manual.

⚠	**Warning!** • It is strictly prohibited to operate the product (including, but not limited to, handling, installation, electrical connection, powering up, maintenance, working at height, etc.) in bad weather, such as thunder, lightning, rain, snow, or winds of more than force six grades. • In case of fire, evacuate the building or product area and call the fire alarm. In any case, re-entry into the burning area is strictly prohibited.
☞	**Note!** • All operations including transport, installation, start-up, and maintenance, must be carried out by qualified, trained personnel. • The electrical installation & maintenance of the inverter shall be conducted by a licensed electrician and shall comply with local wiring rules and regulations. • Please operate the equipment under the condition that you are familiar with and understand the contents of this manual and have the appropriate tools. • The product is a Class 1 radio equipment and complies with requirements of Directive 2014/53/EU.

2.1 Unpacking and Inspection

☞	**Note!** • Check all safety signs, warning labels and nameplates on the product. • Safety markings, warning labels and nameplates must be clearly visible and not be removed or covered before the product is scrapped. • Upon receipt of the product, check the appearance of the product and components for damage, check whether the product received is consistent with the actual product ordered, if there is a problem with the above check items, please do not install and contact CSA Solar.

2.2 Package Safety

⚠	**Danger!** • Make sure the product is free of any electrical connections before installation. • When installing, if drilling is required, make sure you have avoided the pipeline and electric wire in the wall.
⚠	**Warning!** • Before installation, check the unit to ensure it is free of any transport or handling damage, which could affect insulation integrity or safety

	clearances. Choose the installation location carefully and adhere to specified cooling requirements. Unauthorized removal of necessary protections, improper use, incorrect installation, and operation may lead to serious safety and shock hazards or equipment damage. • Any time the inverter has been disconnected from the public network, please be extremely cautious as some components can retain charge sufficient to create a shock hazard. Prior to touching any part of the inverter please ensure surfaces and equipment are under touch with safe temperatures and voltage potentials before proceeding.
⚠	**Caution!** • If the product supports lifting and handling methods and needs to be lifted by heavy tools, it is prohibited for people to pass or stay underneath the product. • When handling the product, please consider the weight of the product and take care to maintain balance to prevent the product from tipping or falling.
☞	**Note!** • Before handling the product, always check to make sure that the tools you are using have been regularly maintained. • Before connecting the inverter to the power distribution grid, contact the local power distribution grid company to get appropriate approvals. This connection must be made only by qualified technical personnel. • Do not install the equipment in adverse environmental conditions such as in close proximity to flammable or explosive substances; in a corrosive environment; where there is exposure to extremely high or low temperatures; or where humidity is high. • Do not use the equipment when the safety devices do not work or are disabled. • Inform the manufacturer about non-standard installation conditions. • Use personal protective equipment, including gloves and eye protection during the installation.

2.3 Electrical Connection Safety

⚠	**Danger!** • Before making electrical connections, make sure that the inverter is not damaged, otherwise it may be dangerous! • Always make sure that the inverter and all switches connected to it are disconnected before electrical connections are made, otherwise there is a risk of electric shock. • When making electrical connections, be sure to wear personal protective equipment and use special insulating tools. • Before touching a DC cable, always use a measuring device to ensure that the cable is not energized. • The inverter must not be connected to a PV string that requires positive or negative grounding.

⚠	**Warning!** • Before supplying power, connect the ground wire. • Incorrect grounding can cause personal injury, death or equipment failure and increase electromagnetic interference. • Ensure that the size of the grounding wire meets the requirements of the safety regulations. • The cables used in the PV power system must be of suitable size, firmly connected and well insulated. • Before connecting the DC connector to the inverter, please check the positive and negative polarity of the PV string and insert the DC connector into the corresponding DC terminal. • During the installation and operation of the inverter, please make sure that the positive or negative pole of the PV string will not be shorted to ground. Otherwise, it may cause AC and DC short circuit of the inverter, resulting in product damage, and loss caused is not covered by the warranty.

2.4 Operation Safety

When routing cables, ensure a distance of at least 30 mm between the cables and heat-generating components or areas to protect the insulation layer of cables from aging and damage.

⚠	**Danger!** • Do not touch the product enclosure. • It is strictly forbidden to plug and unplug any connector on the inverter. • Do not touch any wiring terminal of the inverter. Otherwise, electric shock may occur. • Do not disassemble any parts of the inverter. Otherwise, electric shock may occur. • It is strictly forbidden to touch any hot parts of the inverter (such as the heat sink). Otherwise, it may cause burns. • Do not connect or remove any PV string or any PV module in a string. Otherwise, electric shock may occur. • If the inverter is equipped with a DC switch, do not operate it. Otherwise, it may cause device damage or personal injury. • RF exposure warning: To satisfy RF exposure requirements, a separation distance of 20 cm or more should be maintained between this device and persons during device operation.

2.5 Maintenance Safety

Risk of inverter damage or personal injury due to incorrect service!

⚠	**Danger!** • Before maintenance, disconnect the AC circuit breaker on the grid side and then the DC switch. If a fault that may cause personal injury or device damage is found before maintenance, disconnect the AC circuit breaker and wait until the night before operating the DC switch. Otherwise, a fire inside the product or an explosion may occur, causing personal injuries.

	• After the inverter is powered off for 15 minutes, measure the voltage and current with professional instrument. Only when there is no voltage nor current can operators who wear protective equipment operate and maintain the inverter. • Even if the inverter is shut down, it may still be hot and cause burns. Wear protective gloves before operating the inverter after it cools down. • The power grid side may generate voltage. Always use a standard voltmeter to ensure that there is no voltage before touching.
☞	**Note!** • Do not use the equipment if any operating anomalies are found. Avoid temporary repairs. • All repairs should be carried out using only approved spare parts, which must be installed in accordance with their intended use and by a licensed contractor or authorized CSA Solar service representative. • If the paint on the inverter enclosure falls or rusts, repair it in time. Otherwise, the inverter performance may be affected. • Do not use cleaning agents to clean the inverter. Otherwise, the inverter may be damaged, and the loss caused is not covered by the warranty. • As the inverter contains no parts that can be maintained, never open the enclosure of the inverter or replace any internal components without authorization. Otherwise, the loss caused is not covered by the warranty. • To avoid the risk of electric shock, do not perform any other maintenance operations beyond those described in this manual. If necessary, contact CSA Solar. Otherwise loss caused is not covered by the warranty.

2.6 Disposal Safety

Please scrap the product in accordance with relevant local regulations and standards to avoid property losses or casualties.

3. Introduction

3.1 Product Introduction

H3-50-Plus, H3-60-Plus, H3-75-Plus, H3-80-Plus, H3-100-Plus, H3-125-Plus, P3-50-Plus, P3-60-Plus, P3-75-Plus, P3-80-Plus, P3-100-Plus, P3-125-Plus are three-phase storage inverter models designed for maximum efficiency and reliability. With outstanding specifications and advanced features, The inverter convert solar energy to AC energy and store energy into battery. The inverter can be used to optimize self-consumption, store in the battery for future use or feed-in to public grid. Work mode depends on PV energy and user's preference.

System advantages:

- LCD status indications
- Optimized MPP tracking technology
- 4 MPP trackers or 8 MPP trackers
- Wide MPPT input range
- Remote monitoring via PC or Mobile App
- Supports I/V scanning, intelligent diagnosis, night SVG, AFCI detection and fault recording
- Max. Efficiency up to 98.5%, EU efficiency up to 98.1%, THD<3%
- Supports protection functions such as anti-islanding protection, DC reverse connection protection, AC short-circuit protection, leakage current protection, and surge protection
- IP65 protection level

3.2 Size

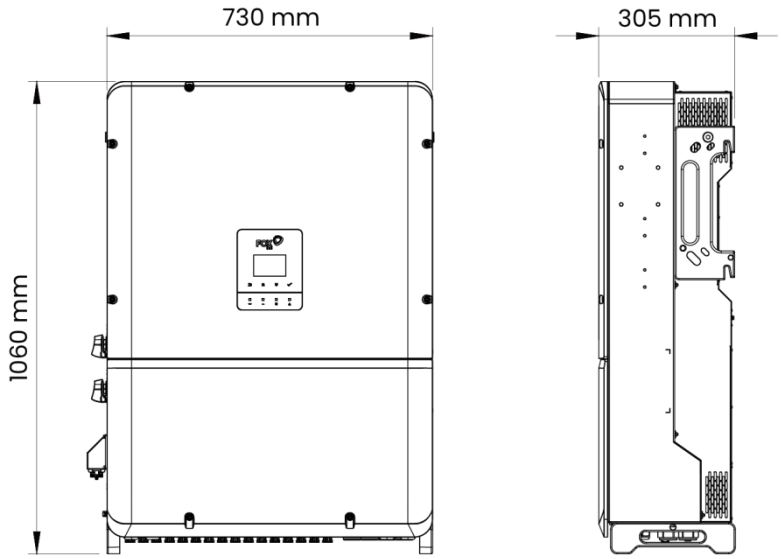

*This manual uses the H3-100-Plus model as illustration example.

3.3 Control Panel

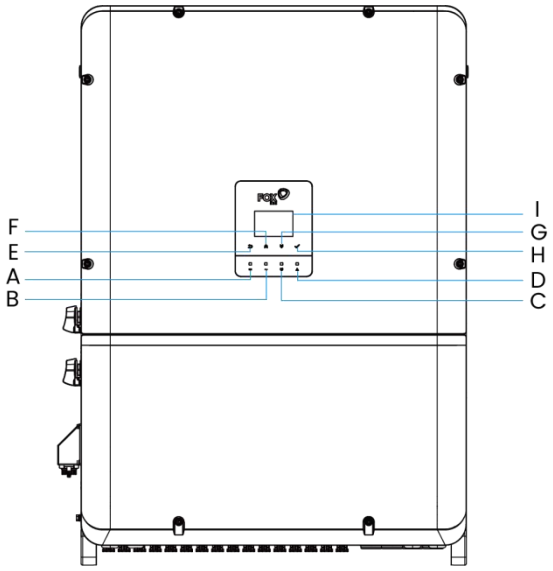

No.	Name	Description
A	DC Indicator (Green)	Please refer to the table below: "**DC Indicator, AC Indicator and Alarm Indicator Status Description"**
B	AC Indicator (Green)	Please refer to the table below: "**DC Indicator, AC Indicator and Alarm Indicator Status Description"**
C	Communication Indicator (Green)	On: Network connection is successful. Data can be transferred normally.
		Flashing (0.5 s on and 0.5 s off): Network connection established. Connecting to FoxCloud.
		Off: No internet connection.
D	Alarm Indicator (Red)	Please refer to the table below: "**DC Indicator, AC Indicator and Alarm Indicator Status Description"**
E	Return	Return to the previous step.
F	Up	Move cursor to upside or increase value.
G	Down	Move cursor to downside or decrease value.

H	OK	Confirm the selection.
I	LCD Screen	Display the information of the inverter.

DC Indicator, AC Indicator and Alarm Indicator Status Description

DC Indicator Status	AC Indicator Status	Alarm Indicator Status	Description
On	On	Off	The PCS (power conversion system) is running in on-grid state and exporting power to the power grid. On-grid mode, operating normally, no faults.
Flashing（1 s on and 1 s off）	Off	On	The DC is on and the AC is off. On-grid mode, at least one of the PV system or the battery is above the operating voltage, and the grid voltage is not present. The system does not distinguish between on-grid and off-grid modes under this condition.
Off	Flashing（0.5 s on and 0.5 s off）	Off/0n	The DC is off and the AC is on. When both the PV and battery voltages are below their operating thresholds, but the grid voltage is present, the alarm indicator remains off if there are no other faults. If a fault occurs, the alarm indicator will turn on.
Flashing（1 s on and 1 s off）	Flashing（0.5 s on and 0.5 s off）	Off/On	The DC is on. The AC is on and the PCS is starting up. When the alarm indicator is off, it indicates that the system is in the startup process. When the alarm indicator is on, it means that either the PV or the battery voltage is above the operating threshold and the grid voltage is present, but the system cannot connect to the grid due to a fault.
Off	Off	On/Off	Both the DC and AC are off. On-grid mode, and both DC and AC are not powered. The system

			does not distinguish between on-grid and off-grid modes under this condition.
On	Off	Off	The PCS is running in backup state. In normal off-grid mode, the AC indicator remains off regardless of whether the grid is present or not.

3.4 Terminals of Inverter

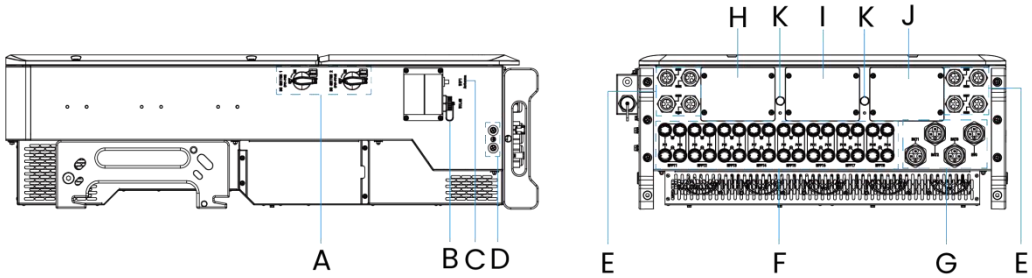

Item	Name	Description
A	DC Switch	It is used for controlling DC input.
B	Communication Terminal	It matches with the monitoring module.
C	Communication Terminal	It matches with the antenna.
D	Secondary Ground Terminal	The inverter provides two secondary ground terminals to ensure reliable grounding. At least one must be connected during installation.
E	M25 Cable Gland	It is used for RS485 communication, DI/DO wiring and PE wiring.
F	DC Input Terminal	H3-50-Plus, H3-60-Plus, P3-50-Plus, P3-60-Plus have 8 pairs of PV connectors. H3-75-Plus, H3-80-Plus, H3-100-Plus, H3-125-Plus, P3-75-Plus, P3-80-Plus, P3-100-Plus, P3-125-Plus have 16 pairs of PV connectors.
G	M32 Cable Gland	It is used for Battery Cable.
H	LOAD Cable Interface	It is used for LOAD Cable.
I	GRID Cable Interface	It is used for GRID Cable.
J	GEN Cable Interface	It is used for GEN Cable.
K	Waterproof Vent Valve	It is non-removable and is designed to make the case both waterproof and air-permeable.

3.5 Circuit Diagram

The following figure shows the circuit.

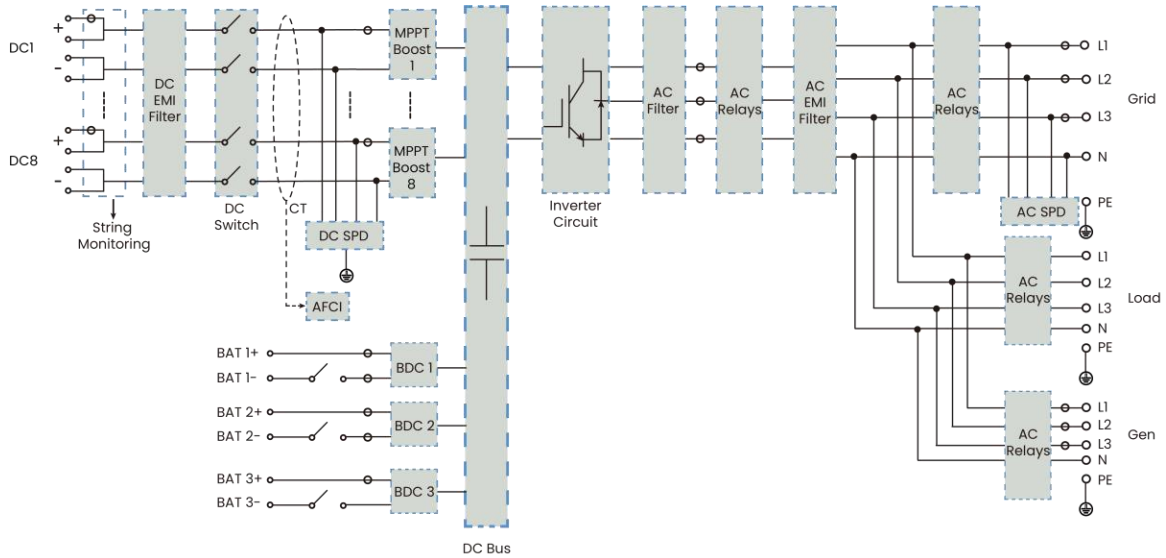

- PV Input Section
  - Multiple PV inputs are connected through individual fuses and monitored via current sensors.
  - DC EMI filters are used to suppress electromagnetic interference, ensuring stable operation and EMC compliance.
- DC Switches and MPPT Boost Modules
  - The system is equipped with independent DC switches for each PV input group, enabling safe maintenance and isolation.
  - Dual MPPT (Maximum Power Point Tracking) boost modules dynamically optimize PV input performance under varying sunlight conditions.
- DC Surge Protection and Arc Fault Detection
  - A DC Surge Protection Device (DC SPD) is integrated to protect the system against lightning and transient voltage surges.
  - The AFCI (Arc Fault Circuit Interrupter) module detects and interrupts dangerous arc faults in the DC circuit.
- Battery Input & Bidirectional DC Converters (BDCs)
  - Supports multiple battery packs through individual BDC modules.
  - Each BDC handles bidirectional power flow for charging and discharging, and connects to a shared DC bus.
- Centralized DC Bus and Inverter Bridge
  - All power inputs converge at the DC Bus, which feeds the inverter circuit.
  - The inverter converts DC to AC with high precision, enabling both grid-tied and off-grid operations.
- AC Output Processing
  - Post-inversion, AC power passes through AC filters and EMI filters to reduce harmonics and EMI.
  - AC relays provide isolation and controlled switching between various operation modes.
- Grid and Load Interface
  - The system delivers AC output to grid (L1, L2, L3, N) and to local loads.
  - It includes an Emergency Power Supply (EPS) output for backup use during grid outages.
- AC Surge Protection and Output Safety

- AC SPD is installed to protect the output side from surge events.
- Additional AC relays manage load-side disconnection or switching when needed.

3.6 Backup Options

The inverter offers two backup options: whole-home backup and partial backup. The selection of loads for each option should be determined during the system design phase.

Whole-home Backup

To enable the whole-home backup option, connect all household loads to the backup panel. This allows the storage system to support all household energy loads in case of a grid failure.

Whole-Home Backup (DC Couple)

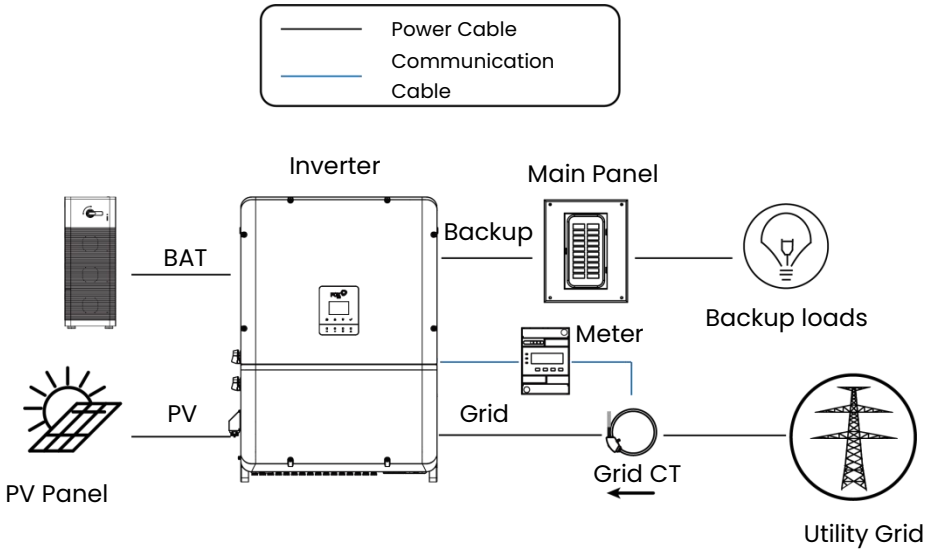

Whole-Home Backup (AC Couple)

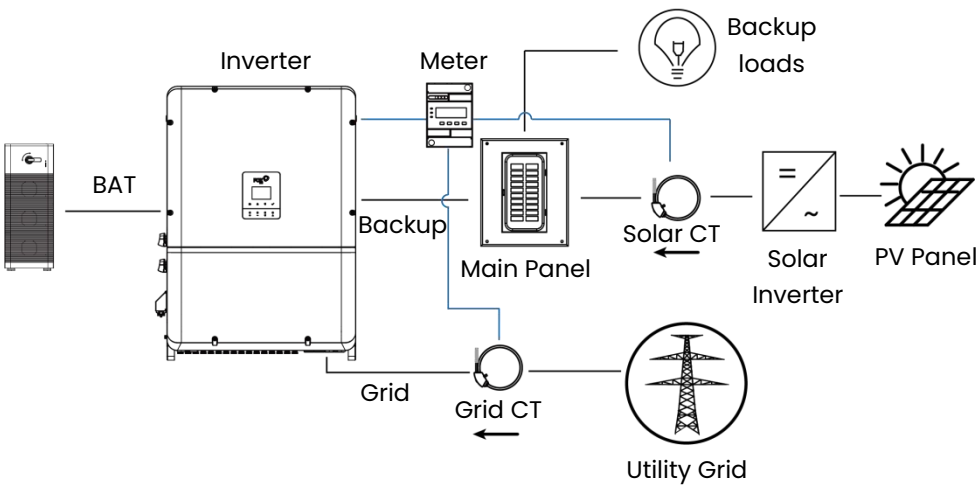

Partial Backup

To configure the system in a partial backup mode, it is necessary to identify the backup loads beforehand. For this purpose, connect the backup loads to the backup panel and the non-backup loads (i.e., non-essential loads) to the main panel. In the event of a grid failure, the storage system powers only the backup loads. This ensures prioritized power supply to backup loads, leaving non-backup loads unpowered.

Partial-Home Backup (DC Couple)

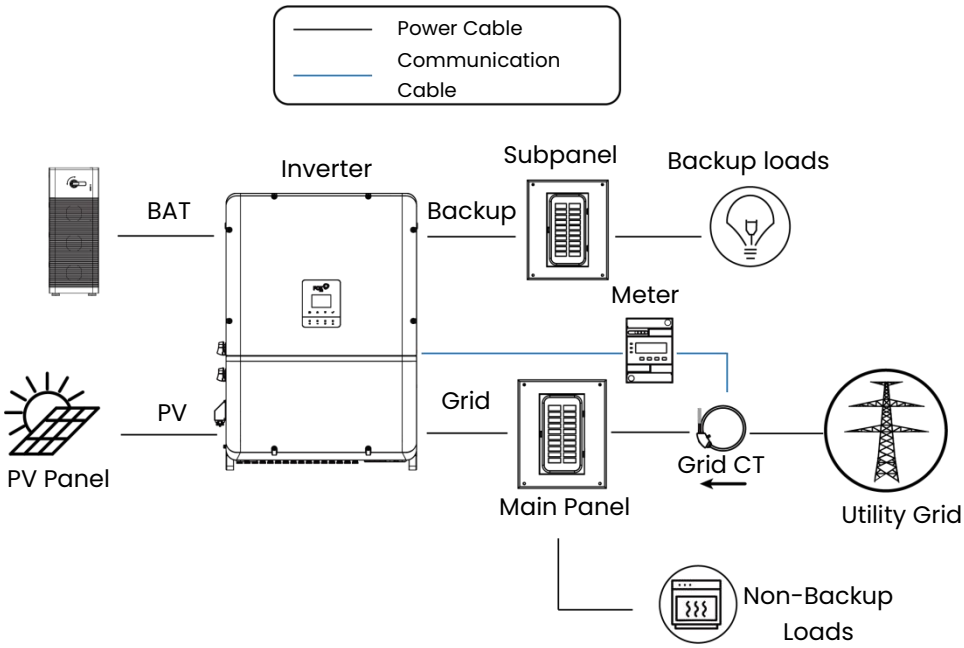

Partial-Home Backup (AC Couple)

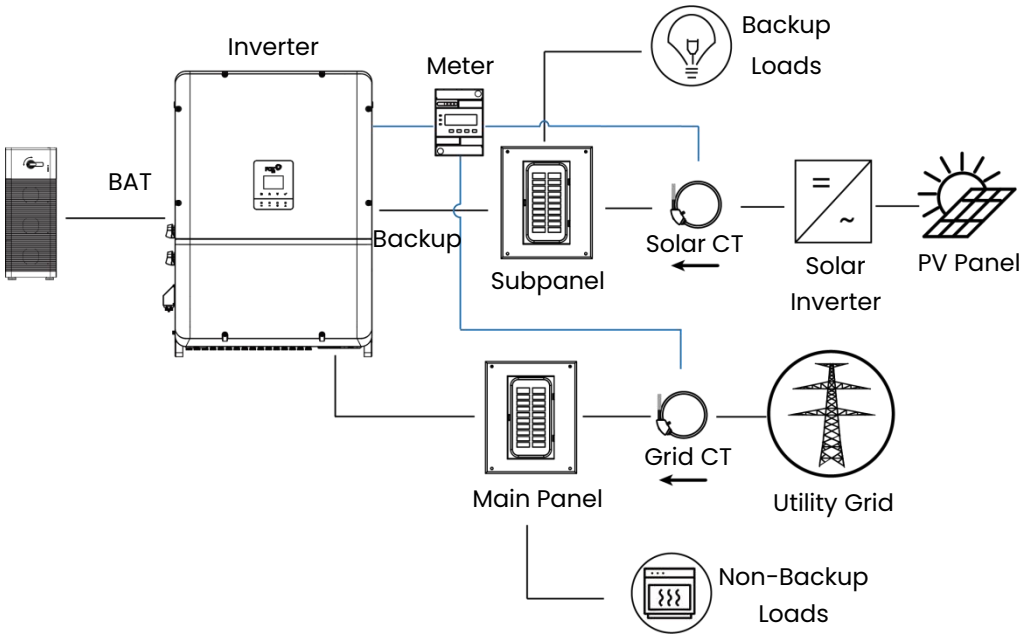

3.7 AFCI Function

When the photovoltaic modules or cables of the inverter are poorly connected or damaged, it may generate arcs. Arcs can potentially lead to fires.

The H3-Plus and P3-Plus series inverters are equipped with AFCI detection function, which is used to detect series arc faults between the photovoltaic array and the inverter. By continuously monitoring the current signal of the circuit between the photovoltaic array and the inverter in real-time, it will rapidly shut off the circuit when an abnormal arc signal is identified owing to the AFCI function. This helps to prevent electrical safety issues caused by arcs, thereby providing assurance for the safety of users' lives and properties.

3.7.1 Function Introduction

- AFCI Monitoring: This function can be used to detect whether serial fault arc occurs in the loop between PV array and the inverter.
- AFCI Self-test: This function is intended to test whether AFCI works as normal.
- AFCI Alarm Clearing: When the inverter detects the AFCI alarm, it stops working. Clear the AFCI alarm so that the inverter can restart the detection.
- Protection Coverage: Two types of classifications are defined for AFCI protection: “F” (Full Coverage) and “P” (Partial Coverage). Full coverage protection (“F”) is available for H3-Plus and P3-Plus series inverters.
- AFPE (Arc Fault Protection Equipment): The inverter is equipped with a fully integrated AFPE, which is implemented within the inverter, including arc plates and current sensors.
- Method of Implementation: Two implementation methods are available for AFCI protection, “D” and “I”. “D” represents “Distributed detection system", where the AFPE comprises more than one device. The devices may be standalone devices or partially integrated within the power conversion equipment (PCE). “I” represents “PCE integrated device”, where the AFPE is implemented within a PCE connected to the PV array. H3-Plus and P3-Plus series inverters adopt "|"

3.7.2 Alarm Clear

The inverter is equipped with AFCI alarm automatic clearing mechanism. If the alarm is triggered < 5 times within 24 hours, the inverter will automatically clear the alarm; if the alarm is triggered ≥ 5 times within 24 hours, the lockout protection state will be triggered. Manual alarm clearing locally is required to making the inverter back into normal operation.

Alarm clearing mechanism: Upon detection of a real arc alarm, the device will trigger an arc alarm and stop operating. For the first to fourth occurrences of arc alarms within the same day, the device will stop operating for 5 minutes and wait for the alarm to be automatically cleared before restarting. When the fifth or subsequent arc alarm occurs, the device will stop operating and will not automatically resume operation on the same day.

For the first to fourth occurrences of arc alarms, the ARM will send a command to clear the arc alarm after 5 minutes of each alarm. Then the arc alarm will be cleared and the device will restart and reconnect to the grid. When the fifth arc alarm is detected, the ARM will not clear the arc alarm, and the device will report the arc alarm and stop operating. The user needs to manually clear the alarm to restart the device and reconnect it to the grid. Alternatively, the user can wait for the alarm to be automatically cleared the next day. For instructions on how to manually clear fault alarms, please refer to “Manual Alarm Clearing Locally” and “Manual Re-clearing Alarm Remotely”.

H3-Plus and P3-Plus inverters have two manual alarm clearing methods:

3.7.2.1 Manual Alarm Clearing Locally

When an arc alarm occurs, user can clear alarm manually. User can access the Web Server (192.168.7.1) by connecting to the monitoring module WiFi. Select "Advanced (String & PE Monitoring)" → "AFCI Alarm Clearing" → "Enable" → "Edit". Then wait for the alarm to be cleared, and restart the inverter.

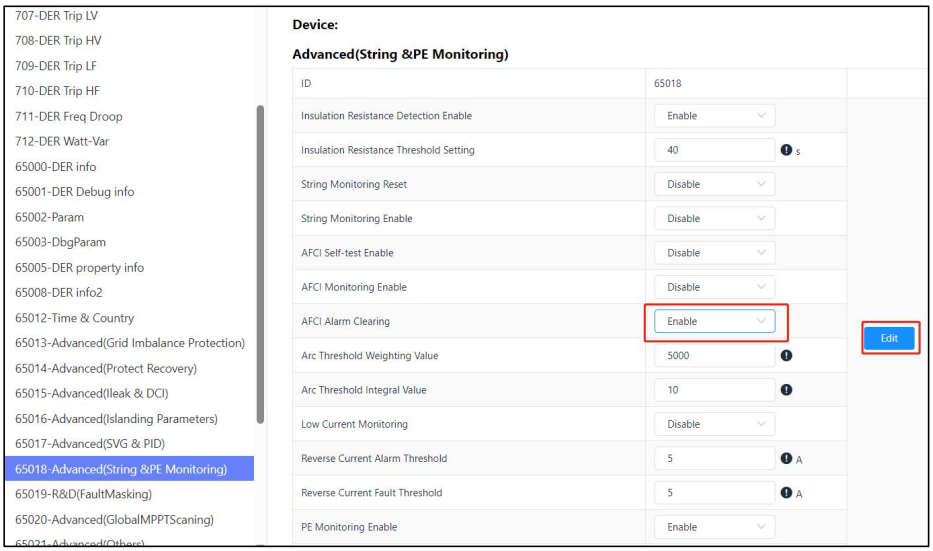

3.7.2.2 Manual Re-clearing Alarm Remotely

When an arc alarm occurs, user can clear alarm by remote access to AFPE. User can log in FoxCloud remotely, then locate the corresponding inverter of the target power station. Click "Remote Setting". Choose "Advanced (String & PE Monitoring)" → "AFCI Alarm Clearing" → "Enable" → "OK". Then wait for the alarm to be cleared, and restart the inverter.

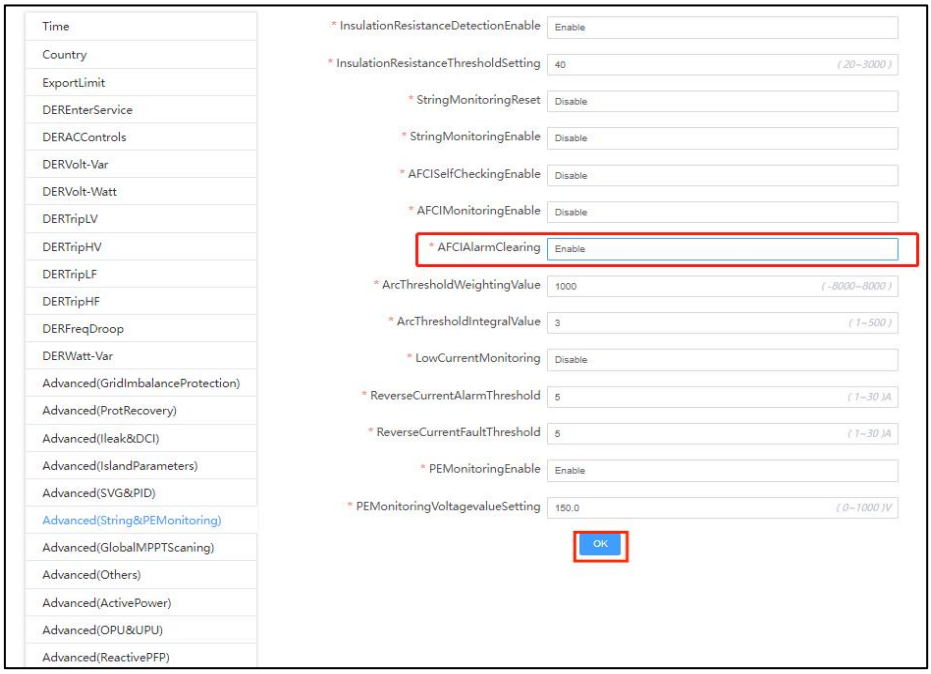

3.7.3 AFCI Protection Configuration

H3-Plus and P3-Plus Inverters AFCI configuration is as shown in the following table.

Model	**H3-50-Plus, H3-60-Plus, P3-50-Plus, P3-60-Plus,**	**H3-75-Plus, H3-80-Plus, H3-100-Plus, H3-125-Plus, P3-75-Plus, P3-80-Plus, P3-100-Plus, P3-125-Plus**
Classification	F–I–AFPE–1–8–1	F–I–AFPE–1–16–1
Rated Channel Current	160 A	320 A
Maximum Current per Input Port	20 A	
Rated Interruption Current	20 A	
Number of Monitored Channels	1	
Number of Monitored Strings per Input Port	2	
Arc Plash Detection and Protection		
Standard	IEC63027	
Protection Coverage	Full Coverage	
Method of Implementation	Integrated	
Functionality	AFPE	
Monitored String per Input Port	1	
Input Port per Monitored Channel	8/1	16/1
Monitored Channels	1	

4. Technical Parameters

4.1 PV Input

Model	H3-50-Plus, P3-50-Plus	H3-60-Plus, P3-60-Plus	H3-75-Plus, P3-75-Plus	H3-80-Plus, P3-80-Plus	H3-100-Plus, P3-100-Plus	H3-125-Plus, P3-125-Plus
PV						
Max. DC Array Power [kW]	100	120	150	160	200	250
Max. DC Input Power [kW]	100	120	150	160	200	250
Max. DC Voltage [V]	1000					
Nominal DC Operating Voltage [V]	750					
Max. Input Current per MPPT [A]	40					
Max. Isc per MPPT [A]	50					
MPPT Voltage Range [V]	180–850					
MPPT Voltage Range (Full Load) [V]	370–850	440–850	280–850	300–850	370–850	460-850
Maximum Inverter Backfeed Current to Array [A]	0					
Start-Up Voltage [V]	180					
MPPT No. / String per MPPT	4/2		8/2			

4.2 Battery

Model	H3-50-Plus, P3-50-Plus	H3-60-Plus, P3-60-Plus	H3-75-Plus, P3-75-Plus	H3-80-Plus, P3-80-Plus	H3-100-Plus, P3-100-Plus	H3-125-Plus, P3-125-Plus
Battery Type	Lithium-Ion					
Battery Voltage Range [V]	180-950					
Nominal Voltage [V]	700					
Full AC Load Battery Voltage [V]	250–820	300–820	370–820	390–820	490–820	600-820
Max. Charge/ Discharge Current [A]	3 × 80					
Number of Battery Input	3					
Communication Interface	CAN					

4.3 AC Input/Output

Model	H3-50 -Plus, P3-50 -Plus	H3-60 -Plus, P3-60 -Plus	H3-75 -Plus, P3-75 -Plus	H3-80 -Plus, P3-80 -Plus	H3-100 -Plus, P3-100 -Plus	H3-125 -Plus, P3-125 -Plus
AC Input						
Rated Grid Voltage [V]	220/380 230/400 3W+N+PE Or 3W+PE					
Nominal AC Input Frequency [Hz]	50/60					
Max AC Current for Battery Charged [A]	83.6	100.3	114*/ 125.4	133.7	152	152
Max AC Power for Battery Charged [kW]	55	66	75*/ 82.5	88	100	100
Max. Input Current [A]	300					
Max. Input Power [kW]	207					
Max. Apparent Power [kVA]	207					
Power Factor	0.8 Leading to 0.8 Lagging					
AC Output						
Rated Power [kW]	50	60	75	80	100	125
Rated Apparent Power [kVA]	50	60	75	80	100	125
Max. Active Power [kW]	55	66	75*/ 82.5	88	110	130*/ 137.5
Max. Apparent AC Power [kVA]	55	66	75*/ 82.5	88	110	130*/ 137.5
Rated Current	76 A @ 380 V 72.2 A @ 400 V	91.2 A @ 380 V 86.6 A @ 400 V	113.9 A @ 380 V 108.3 A @ 400 V	121.6 A @ 380 V 115.5 A @ 400 V	152 A @ 380 V 144.4 A @ 400 V	190 A @ 380 V 181.2 A @ 400 V
Max. Output Current (Per phase)	83.6 A @ 380 V 79.4 A @ 400 V	100.3 A @ 380 V 95.3 A @ 400 V	114*/ 125.4 A @ 380 V 119.1 A @ 400 V	133.7 A @ 380 V 127.0 A @ 400 V	167.2 A @ 380 V 158.8 A @ 400 V	198.5 A @ 380 V 198.5 A @ 400 V
Maximum Output Fault	582 A, 68 us					

Current [A]	
AC Inrush Current [A]	100 A, 1 ms
Maximum Output Overcurrent Protection	280 Arms, 398 Apeak
Power Factor	0.8 Leading to 0.8 Lagging
Export Control	Yes
Max. THDi [%]	<3@Rated Power
DC Input Current [%]	0.5@Rated Current

*Brazil only

4.4 EPS Output

Model	**H3-50 -Plus, P3-50 -Plus**	**H3-60 -Plus, P3-60 -Plus**	**H3-75 -Plus, P3-75 -Plus**	**H3-80 -Plus, P3-80 -Plus**	**H3-100 -Plus, P3-100 -Plus**	**H3-125 -Plus, P3-125 -Plus**
EPS Output (With Battery)						
Rated Power [kW]	50	60	75	80	100	125
Rated AC Output Apparent Power [kVA]	50	60	75	80	100	125
Max. AC Output Apparent Power [kVA]	55	66	75*/ 82.5	88	110	130*/ 137.5
Peak Apparent AC Power [kVA] (10 s)	155					
Rated AC Output Current [A]	76	91.2	113.9	121.6	152	190
Max. AC Output Current [A]	83.6	100.3	114*/ 125.4	133.7	167.2	198.5
Rated Output Voltage [V]	220/380 230/400 3W+N+PE					
Rated Grid Frequency [Hz]	50/60					
Parallel Operation	Yes@Max 10 Pcs					
On/Off-Grid Switch Time [ms]	<10					
Peak Current (Off Grid)	225 A, 10 s					
LRA Current [A]	300					
Max. THDv (Off Grid) [%]	<3 (Linear Load)					

*Brazil only

4.5 Diesel Generator Specification

Model	H3-50 -Plus, P3-50 -Plus	H3-60 -Plus, P3-60 -Plus	H3-75 -Plus, P3-75 -Plus	H3-80 -Plus, P3-80 -Plus	H3-100 -Plus, P3-100 -Plus	H3-125 -Plus, P3-125 -Plus
Diesel Data						
Max. AC Apparent Power [kVA]	207					
Rated AC Voltage [V]	220/380 230/400 3W+N+PE Or 3W+PE					
Max. AC Input Current [A]	300					
Rated AC Frequency [Hz]	50/60					
Power Factor	0.8 Leading to 0.8 Lagging					
Max. THDi [%]	< 3 @Rated Power					

4.6 Efficiency and Protection

Model	H3-50 -Plus, P3-50 -Plus	H3-60 -Plus, P3-60 -Plus	H3-75 -Plus, P3-75 -Plus	H3-80 -Plus, P3-80 -Plus	H3-100 -Plus, P3-100 -Plus	H3-125 -Plus, P3-125 -Plus
Efficiency						
MPPT Efficiency [%]	99.9					
Max. Efficiency [%]	98.5					
Euro-Efficiency [%]	98.1					
Protection						
PV Reverse Polarity Protection	Yes					
Battery Reverse Protection	Yes					
Anti-Islanding Protection	Yes					
Active Anti-Islanding Method	Reactive Power Disturbance					
Output Short Circuit Protection	Yes					
Leakage Current Protection	Yes					
Insulation Resistance Detection	Yes					
Over Voltage Category	III (AC side), II (DC side)					
Reverse Connect Protection	Yes					

Over Current Protection	Yes
AC/DC Surge Protection	Type II/Type II
AFCI	Yes
DC Input Switch	Yes
String Monitoring Function	Yes

4.7 General Data

Model	H3-50-Plus, P3-50-Plus	H3-60-Plus, P3-60-Plus	H3-75-Plus, P3-75-Plus	H3-80-Plus, P3-80-Plus	H3-100-Plus, P3-100-Plus	H3-125-Plus, P3-125-Plus
Dimension and Weight						
Dimensions (W × H × D) [mm]	730 × 1060 × 305					
Weight [kg]	115	115	120	120	120	120
Cooling	Smart Air Cooling					
Inverter Topology	Non-Isolated					
Communication Interface	USB / RS485 / Bluetooth / WiFi+LAN / 4G (Optional) / CAN					
Display	LED, LCD, WiFi+APP					
Environment Limit						
Installation	Bracket-Mounted or Wall-Mounted Installation					
Ingress Protection	IP65					
Operating Temperature Range [°C]	-30 to +60					
Humidity [%]	0 to 100					
Altitude [m]	4000					
Protective Class	I					
Storage Temperature [°C]	-40 to +70					
Standby Consumption [W]	<60					
Idle Mode	Support					
Button	Capacitive Touch Sensor × 4					
Model of Operation	Wi-Fi 2.4 GHz (Operating Frequency Range: 2412 to 2472 MHZ Maximum RF Output Power：19 dBm) **Or** Bluetooth (Operating Frequency Range: 2402 to 2480 MHZ Maximum RF Output Power：8 dBm)					

5. Installation

5.1 Installation Safety

	Danger! Make sure there is no electrical connection before installation.
	Warning! • Please install the product in a well-ventilated environment. • Ensure that the heat dissipation system or vent is not blocked. • Do not install the product in a flammable or explosive or fuming environment.
	Caution! • When handling the product, please pay attention to the weight of the product and maintain balance to prevent the product from tipping or falling. • The bottom terminals and interfaces of the inverter cannot directly contact the ground or other supports. The inverter cannot be directly placed on the ground.
	Note! • Use personal protective equipment, including gloves and goggles, during installation. • Make sure to avoid the water and electricity wiring in the wall before drilling. • Protect the product from shavings and dust.

5.2 Check for Physical Damage

Make sure the inverter has not been damaged during transportation. If there is any visible damage, such as cracks, please contact your dealer immediately.

5.3 Packing List

Open the package and take out the product, please check the accessories first. The packing list is as shown as below:

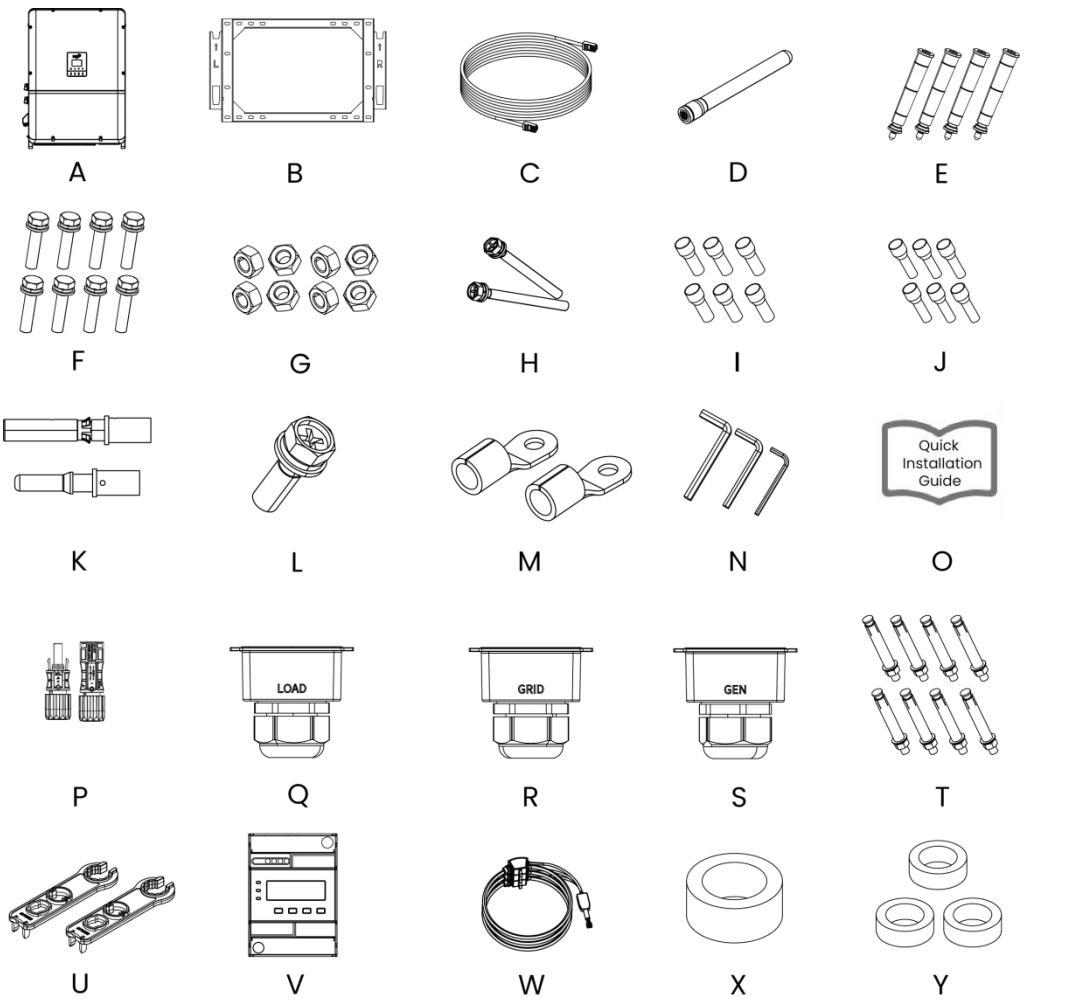

Object	Quantity	Description	Object	Quantity	Description
A	1	Inverter	**B**	1	Hanging Plate
C	1	Meter Communication Cable	**D**	1	Antenna
E	4	Screw-in Type Handle	**F**	8	M10 × 45 Bolt Assembly
G	8	M10 Hexagon Nut	**H**	2	M6 × 65 Bolt Assembly
I	6	25 mm² Tube-type Cold-Pressed Terminal (for CQ6 & CQ7 Batteries)	**J**	6	16 mm² Tube-Type Cold-Pressed Terminal (for CQ16 Battery)
K	16/32	DC Pin Plug (4 MPPT: Positive × 8, Negative × 8; 8 MPPT: Positive ×16, Negative × 16)	**L**	12	M5 × 16 Bolt Assembly
M	2	Ground Terminal	**N**	3	5 mm & 8 mm & 10 mm Internal Hexagon

					Wrench
O	1	Quick Installation Guide	**P**	16/32	DC Connector (4 MPPT: Positive × 8, Negative × 8; 8 MPPT: Positive ×16, Negative × 16)
Q	1	Load Cable Grommet	**R**	1	Grid Cable Grommet
S	1	Generator Cable Grommet	**T**	8	M10 × 100 Expansion Bolt
U	2	DC Connector Removal Tool	**V**	1	Meter
W	1	CT	**X**	1	Big Magnetic Ring (for Battery Power Cable)
Y	3	Small Magnetic Ring (for BMS Communication Cable)			

Note: H3-50-Plus, H3-60-Plus, P3-50-Plus, P3-60-Plus inverters are provided with DC Connector (Positive × 8, Negative × 8) and DC Pin Plug (Positive × 8, Negative × 8). H3-75-Plus, H3-80-Plus, H3-100-Plus, H3-125-Plus, P3-75-Plus, P3-80-Plus, P3-100-Plus, P3-125-Plus inverters are provided with DC Connector (Positive × 16, Negative × 16) and DC Pin Plug (Positive × 16, Negative × 16).

5.4 Mounting

The inverter with protection rating IP65 can be installed both indoors and outdoors. (However, the CQ16 battery must be installed indoors.) The inverter should be installed at a height that allows easy viewing of the control panel, as well as easy electrical connection, operation and maintenance.

5.4.1 Environment Requirement

- Installation Precaution

Make sure the installation location complies with the following conditions:

- Not in direct sunlight.
- Not in areas where highly flammable materials are stored.
- Not in potential explosive areas.
- The location should not be accessible to children.
- Not in the cool air directly.
- Not near the television antenna or antenna cable.
- Not higher than altitude of about 4000 m above sea level.
- Not in environment of precipitation or humidity (>100%).
- Under good ventilation condition.
- The ambient temperature in the range of -40 °C to +70 °C.
- The slope of the wall should be within ±5°.
- The wall hanging the inverter should meet conditions below:
  1. Solid brick/concrete, or strength equivalent mounting surface;
  2. Ensure that the installation surface is solid enough to bear four times the weight of

the inverter. The inverter must be supported or strengthened if the wall's strength isn't enough (such as wooden wall, the wall covered by thick layer of decoration).

- Avoid direct sunlight, rain exposure, snow laying up during installation and operation.

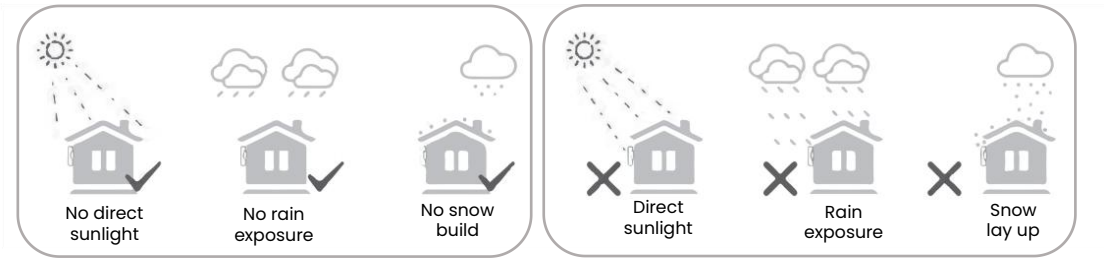

5.4.2 Space Requirement

Make sure there is enough space around the inverter for ventilation.

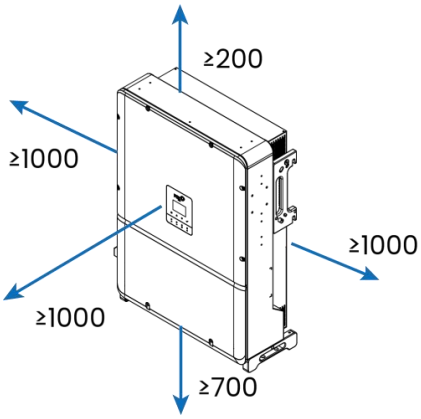

Position	Min Size
Left	1000 mm
Right	1000 mm
Top	200 mm
Bottom	700 mm
Front	1000 mm

5.4.3 Angle Requirement

Install the inverter vertically or at the maximum allowable rear tilt angle. Do not install the inverter horizontally forward, excessively backward, sideways, or upside down. Inverters in floating plants cannot be installed at a back tilt.

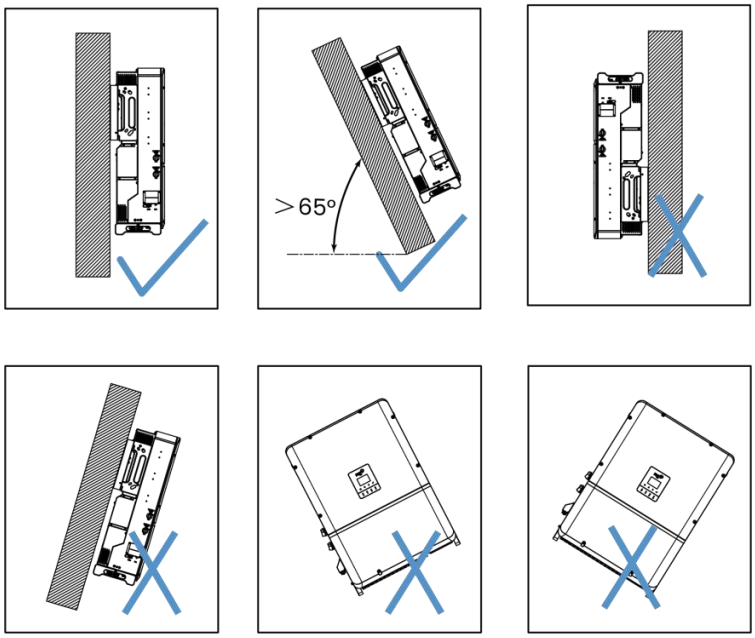

5.4.4 Installation Steps

Tools required for installation include, but not limited to, the following recommended tools. If necessary, use other auxiliary tools on the spot.

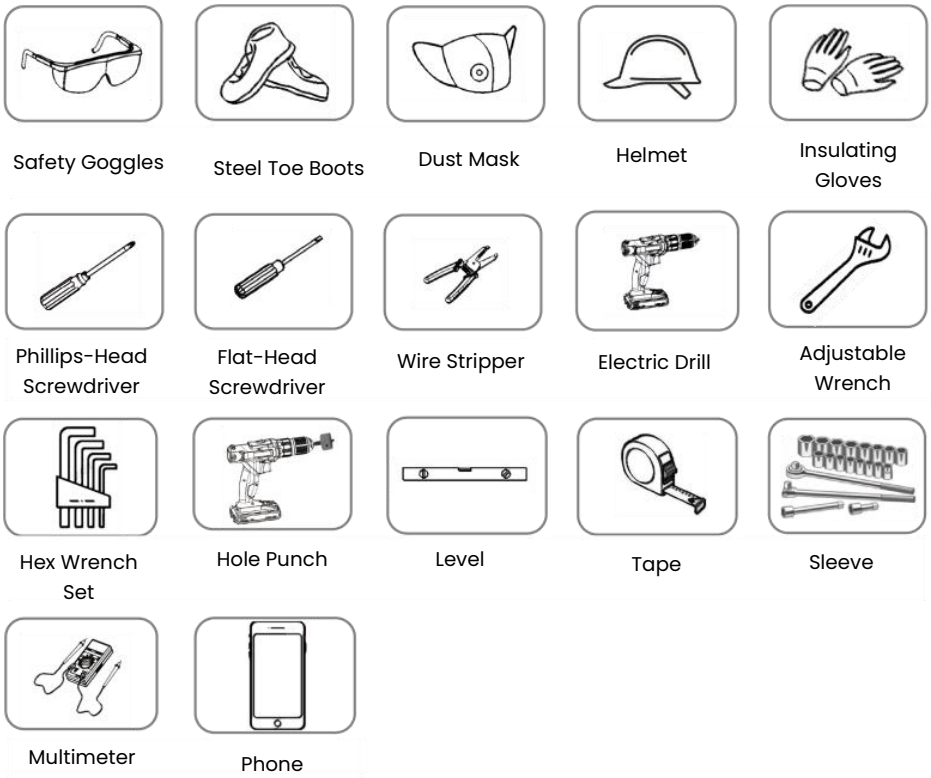

Hanging Plate Size

Install the Inverter on a bracket or wall by means of the hanging plate. The size of the hanging plate is shown as below:

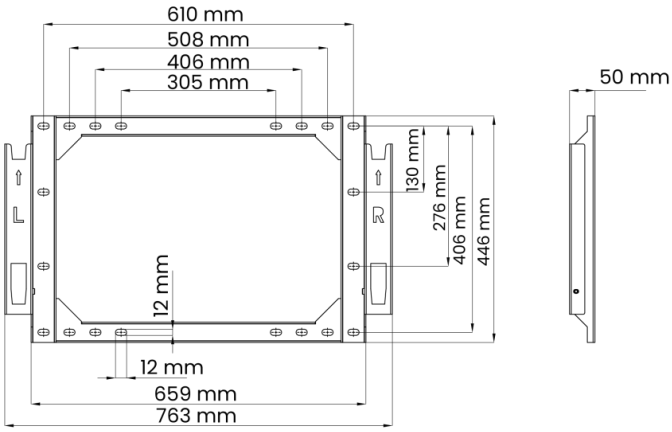

Step 1: Bracket-mounted or Wall-mounted Installation

Method 1: Bracket-mounted Installation

1. Place the hanging plate on a PV bracket, adjust the angle with a level, mark drilling positions, and drill holes with an electric drill (with a Φ12 drill bit).

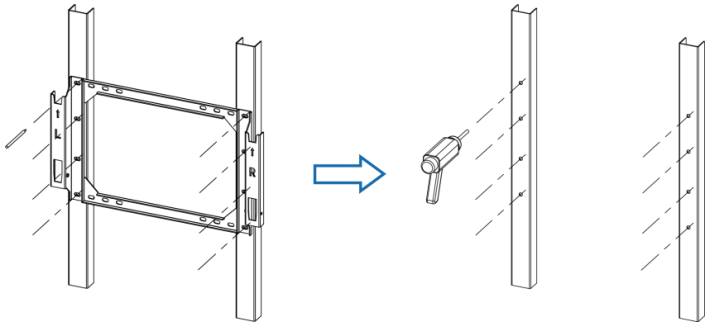

2. Fix the hanging plate with bolts.

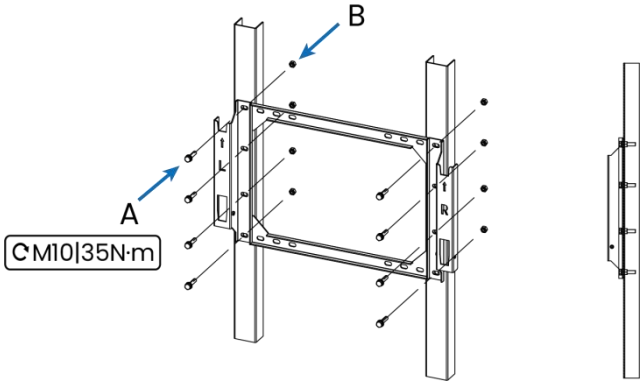

A: 8 PCS of M10 × 45 hexagon bolts
B: 8 PCS of hexagon nuts

Method 2: Wall-mounted Installation

1. Place the hanging plate at the installation site, adjust the angle with a level, and mark drilling positions.

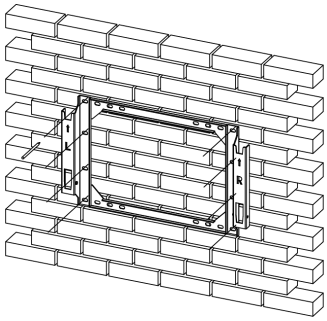

2. Drill holes with a hammer drill (with a ϕ12 drill bit), clear holes, insert 8 PCS of expansion bolts (M10 × 100) into holes, and fix them with a rubber hammer.

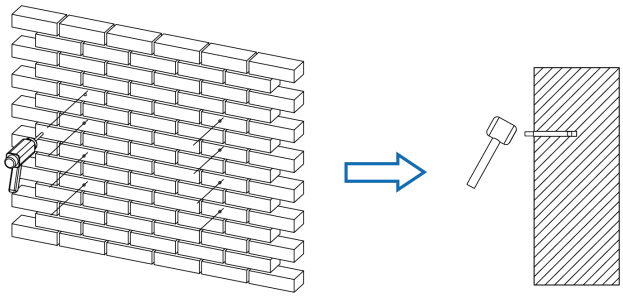

3. Fix the hanging plate with expansion bolts.

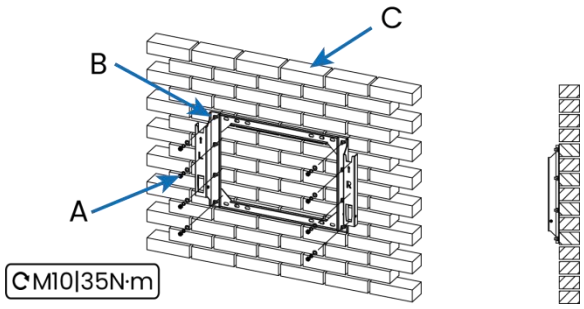

A 8 PCS of M10 hexagon nuts
B 8 PCS of expansion bolts (M10)
C Wall

Step 2: Inverter Installation

1. Lift the inverter from the package box with 4 PCS of screw-in type handles.

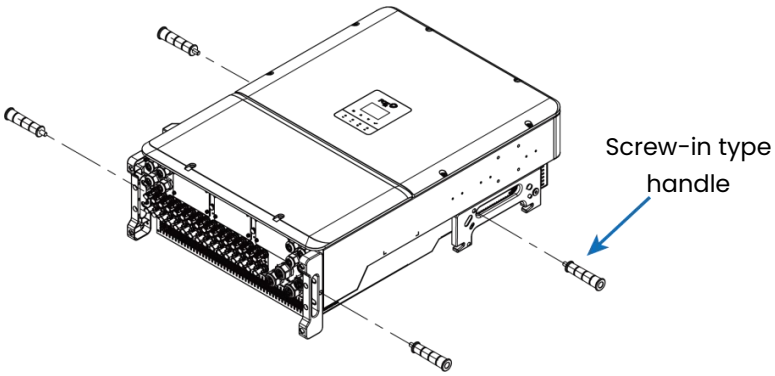

⚠	**Caution!** The product is heavy! When handling the product, please pay attention to the weight of the product and maintain balance to prevent the product from tipping or falling.

2. Install the inverter on the hanging plate, and ensure that lugs of the inverter are properly matched with slots of the hanging plate.

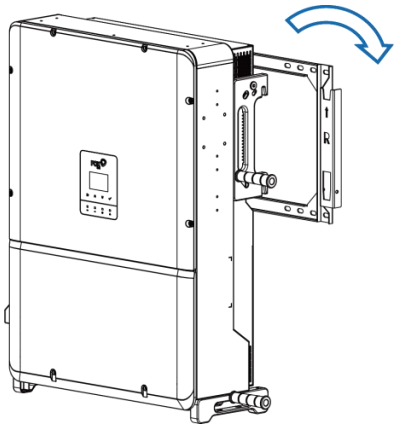

3. Secure the inverter with bolts.

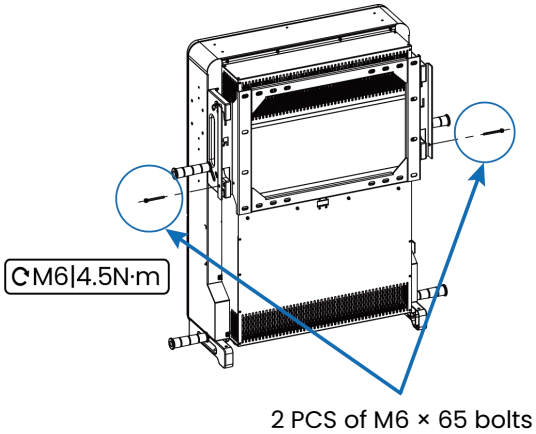
M6|4.5N·m
2 PCS of M6 × 65 bolts

6. Electrical Connection

6.1 Safety Precautions

⚠	**Danger!** • Must ensure that cables are voltage-free with a measuring instrument before proceeding electrical connection. • Before electrical connections, please make sure that the inverter switch and all switches connected to the inverter are set to "OFF", otherwise electric shock may occur! • Do not close the AC circuit breaker until the electrical connection is completed.
⚠	**Warning!** • Install the external protective grounding cable first when performing electrical connection and remove the external protective grounding cable last when removing the inverter. Otherwise, it may cause personal injury or product damage. • Please use measuring devices with an appropriate range. Overvoltage can damage the measuring device and cause personal injury.
☞	**Note!** • Electrical connection must be performed by professionals. • Operators must wear proper personal protective equipment during electrical connections. • All cables used in the PV generation system must be firmly attached, properly insulated, and adequately dimensioned. • Cables used by the user shall comply with the requirements of local laws and regulations. • When the wiring is completed, seal the gap at the cable inlet and outlet holes with fireproof/waterproof materials such as fireproof mud to prevent foreign matter or moisture from entering and affecting the long-term normal operation of the inverter.

6.2 Communication Terminal

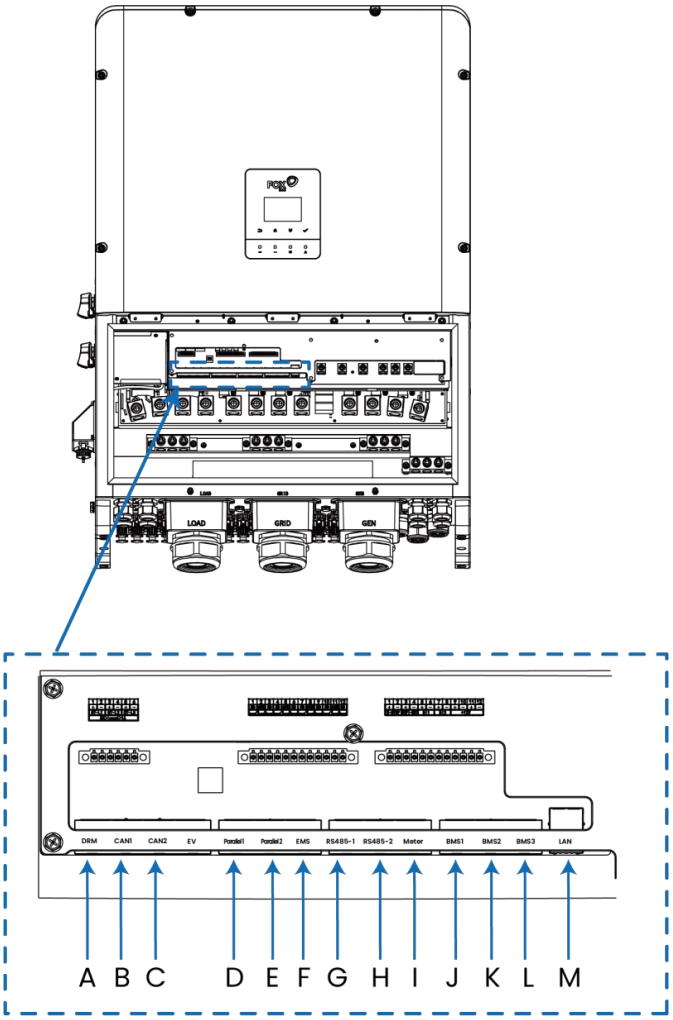

6.2.1 Terminal Description

Object	Label	Description
A	DRM	Logic Terminal for AS/NZS 4777.2:2020.
B	CAN1	Reserved
C	CAN2	
D	EV	EV Communication Terminal
E	Parallel1	Parallel Communication Terminal
F	Parallel2	
G	EMS	EMS Communication Terminal
H	RS485-1	Reserved RS485 Communication Terminal
I	RS485-2	
J	Meter	For energy meter communication.

K	BMS1	BMS Terminal for Battery Communication
L	BMS2	
M	BMS3	
N	LAN	Local Area Network Terminal

6.2.2 Terminal Pin Description

Cable Pin	1	2	3	4	5	6	7	8
Meter	Meter 485A	Meter 485B	ISO_ GND	Meter 485A	Meter 485B	ISO_ GND		
DRM	DRM 1/5	DRM 2/6	DRM 3/7	DRM 4/8	REF GEN/0	COM LOAD/0	DI_ GND	DI_ GND
EMS	EMS-485A	EMS-485B	ISO_ GND	EMS-485A	EMS-485B	ISO_ GND		
EV	EV_ CANH	EV_ CANL	ISO_ GND	EV_ CANH	EV_ CANL	ISO_ GND		
RS485-1	RS-485A	RS-485B	ISO_ GND	RS-485A	RS-485B	ISO_ GND		
RS485-2	RS-485A	RS-485B	ISO_ GND	RS-485A	RS-485B	ISO_ GND		
CAN1	RS-CAN H1	RS-CAN L1	ISO_ GND	RS-CAN H1	RS-CAN L1	ISO_ GND		
CAN2	RS-CAN H2	RS-CAN L2	ISO_ GND	RS-CAN H2	RS-CAN L2	ISO_ GND		
BMS-1	BAT AWA KEN1	ISO_ GND		BMS 1CANL	BMS 1CANH	BMS 1CANH	BMS 1CANL	
BMS-2	BAT AWA KEN2	ISO_ GND		BMS 2CANL	BMS 2CANH	BMS 2CANH	BMS 2CANL	
BMS-3	BAT AWA KEN3	ISO_ GND		BMS 3CANL	BMS 3CANH	BMS 3CANH	BMS 3CANL	

Note!

- When using the AC Couple function, connect the Solar Meter communication cable to the inverter's RS485-1 terminal.
- When using the diesel generator function, connect the Diesel Meter communication cable to the inverter's RS485-2 terminal.
- When the inverter's RS485-1 or RS485-2 terminal is connected to a meter, refer to the "Meter" pin definitions in the table above for their pin descriptions.

6.3 Secondary Ground Connection

⚠	**Danger!** Make sure that the grounding cable is connected reliably. Otherwise, it may cause electric shock.
⚠	**Warning!** • Since the inverter topology is non-isolated, neither the negative electrode nor the positive electrode of the PV string can be grounded. Otherwise, the inverter will not operate normally. • The external protective grounding point provides a reliable ground connection. Do not use an improper grounding conductor for grounding, Otherwise, it may cause product damage or personal injury. • Grounding Cables Requirements: (1) For cables ≥ 10 mm^2 (Copper) or 16mm^2 (Aluminum): It is recommended that both the external PE terminal and the AC-side grounding terminal be reliably grounded. (2) For cables < 10 mm^2 (Copper) or 16 mm^2 (Aluminum): You must ensure that both the external PE terminal and the AC-side grounding terminal are reliably grounded.
☞	**Note!** • All non-current carrying metal parts and device enclosures in the PV power system should be grounded. • When there is only one inverter in the PV system, connect the external protective grounding cable to a nearby grounding point. • When there are multiple inverters in the PV system, connect all inverter external protective grounding terminals and the grounding points of the PV module brackets to equipotential line (according to the onsite conditions) to ensure equipotential connections.

Lock crimped ground cables to ground holes with screw locks on the inverter case, and paint the ground screws and ground terminals to improve anti-corrosion characteristics.

The conductor sectional area of each ground cable is 25–50 mm^2 (30–35 mm^2 is recommended).

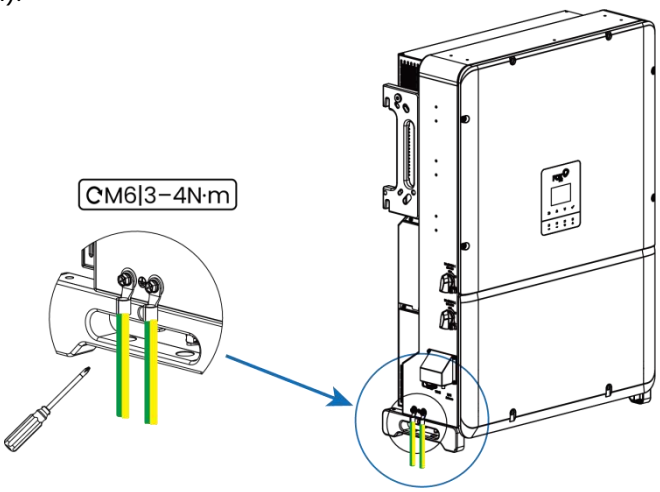

6.4 AC Wiring

6.4.1 AC Wiring Requirements

	Note! Only with the permission of the local grid department, the inverter can be connected to the grid.

AC Circuit Breaker

A separate three-pole or four-pole circuit breaker should be installed on the external AC side of each inverter to ensure safe disconnection from the grid.

Model (kW)	50, 60, 75, 80, 100, 125
Cable	90–150 mm²
AC Breaker	320 A

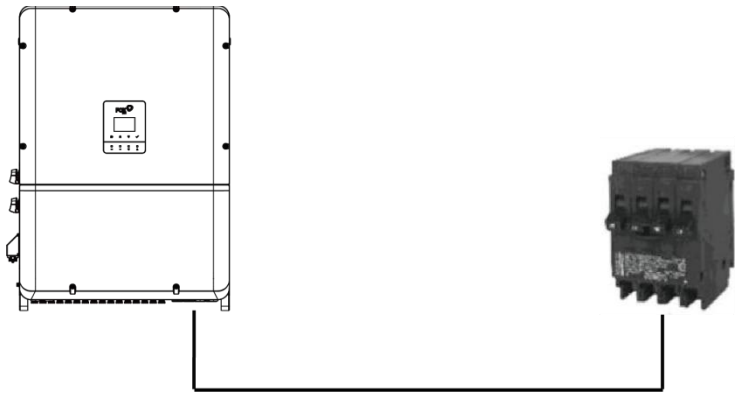

	Warning! • AC circuit breakers should be installed on the AC side of the inverter and the grid side to ensure safe disconnection from the grid. • Multiple inverters cannot share one AC circuit breaker. • The maximum current of the AC breaker is 320 A. The AC breaker shall be selected based on actual on-site conditions, and its capacity must be lower than the upper limit of the wire's current-carrying capacity.
	Note! If the power of impact loads (e.g. motors) exceeds 30 kW, or the required inrush current exceeds 700 A, a soft-start device (such as a variable frequency drive) shall be installed.

6.4.2 Wiring Steps

Check the grid voltage and compare with the permitted voltage range (refer to technical data).
Disconnect the circuit-breaker of all the phases and secure against re-connection.
Preparation: Trim the cables

Cable Type	Outer Diameter (mm)	Copper Conductor Sectional Area (mm^2)
LOAD/GRID/GEN	25–66	L1,L2,L3,(N) cables: 90–150 PE: S/2 (S is a sectional area of LOAD/GRID/GEN phase cable)

*Please refer to local cable type and color for actual installation

Warning!

- Select cables of different specifications based on the actual on-site load and power demand. Ensure that the cable cross-sectional area meets the actual current-carrying capacity requirements.
- Do not strip or cut cable wires inside or near the lower enclosure. Before routing multi-core cable wires into the lower enclosure, check and remove any broken or damaged cable strands at the cable ends. Loose strands may fall into the enclosure and cause a short circuit.

1. Open the lower enclosure with a 5 mm internal hexagon wrench. Open the breaker and prevent accidental reclosing. Use a Phillips screwdriver to remove the bottom cover for wiring, and keep the removed screws for subsequent installation.

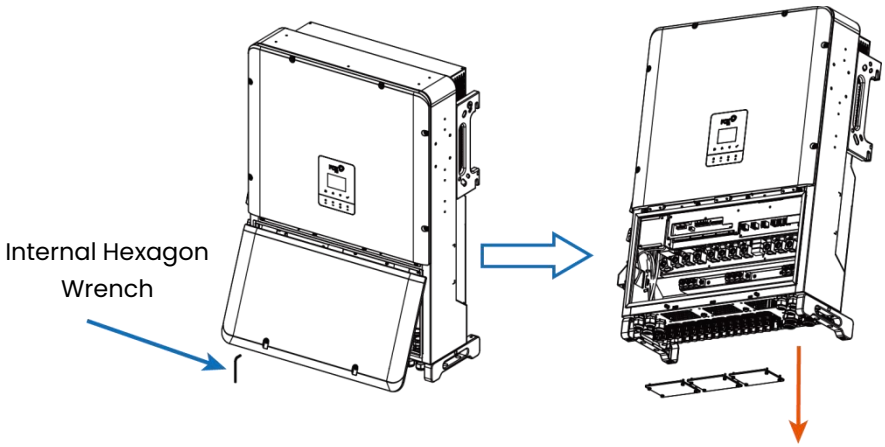

2. Pass the independent grounding wire through the cable gland COM8, insert it into the grounding connector, and tighten it with a 8 mm internal hexagon wrench.

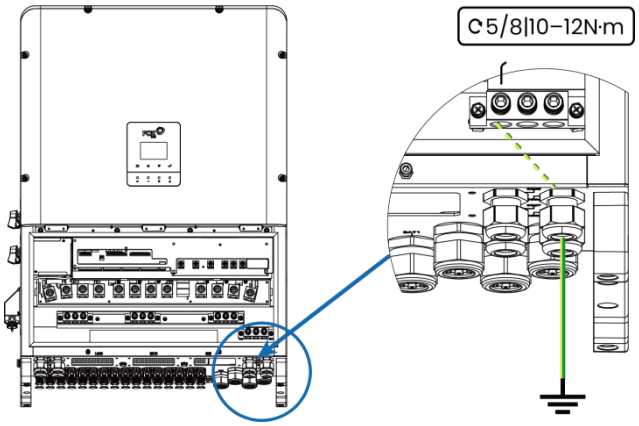

3. Strip the cables' insulation layers. Then select appropriate threading seals based on the cables' outer diameters and thread them through the gland covers.

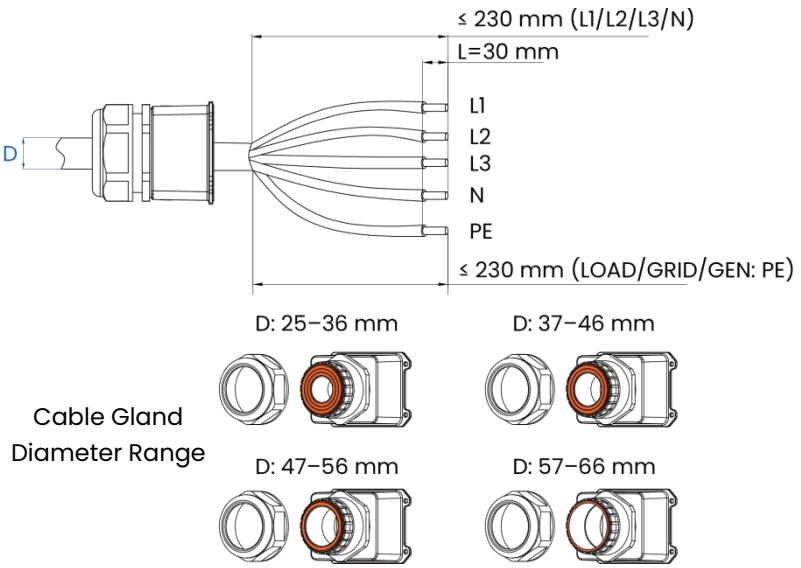

4. 4.Pass the LOAD/GRID/GEN cables through the corresponding cable glands in the enclosure and tighten them to the respective terminals with 8 mm and 10 mm internal hexagon wrenches. Then, secure the cable grommets to the enclosure with M5 × 16 screws with a screwdriver.

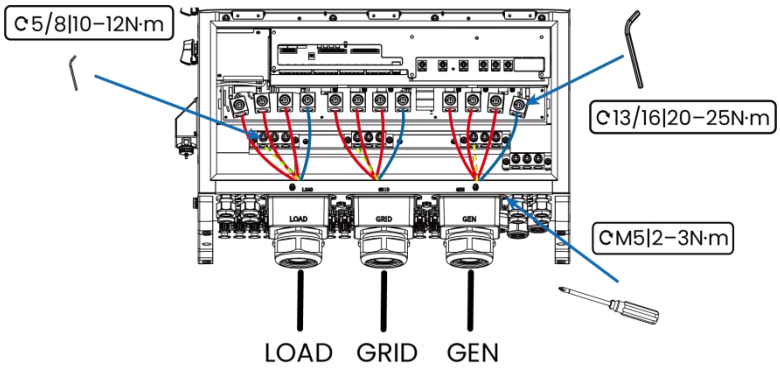

	Note! Note the positions of the PE and N wires. Connecting a phase wire to the PE or N terminal may cause irreparable damage to the inverter.

6.5 DC Connection

This series inverters can be connected with at most 16 strings of PV modules depending on the inverter type. Please select suitable PV modules with high reliability and quality. Open circuit voltage of the module array connected should be less than 1000V, and operating voltage should be within the MPPT voltage range.

	Warning! • Make sure the PV array is well insulated to ground before connecting it to the inverter. • Do not ground the positive or negative terminal of the PV cable. • The photovoltaic modules have high voltage. Please observe electrical safety rules when proceeding electrical connection. • Before connecting the DC connector to the inverter, please check the positive and negative polarity of the PV string and make sure it is correct before inserting the DC connector into the corresponding DC terminal.

	• During the installation and operation of the inverter, please ensure that the positive or negative electrodes of PV strings do not short-circuit to the ground. Otherwise, an AC or DC short-circuit may occur, resulting in equipment damage. The damage caused by this is not covered by the warranty. • Electric arc or contactor over-temperature may occur if the DC connectors are not firmly in place, and the loss caused is not covered by the warranty. • If the DC input cables are reversely connected or the positive and negative terminals of different MPPT are shorted to ground at the same time, while the DC switch is in the "ON" position, do not operate immediately. Otherwise, the inverter may be damaged. Please turn the DC switch to "OFF" and remove the DC connector to adjust the polarity of the strings when the string current is lower than 0.5 A. • Inverters do not support full parallel connection of strings (Full parallel connection refers to a connection method in that strings are connected in parallel and then connected to the inverter separately). • Do not connect one PV string to multiple inverters. Otherwise, the inverters may be damaged.
	Note! • PV modules - please ensure they are the same type, have the same output and specifications, are aligned identically, and are tilted to the same angle. In order to save cable and reduce DC loss, we recommend installing the inverter as near to the PV modules as possible. • Mixed use of PV modules of different brands or models in one MPPT circuit, or PV modules of different orientation or inclination in a string may not damage inverter, but will cause system bad performance! • The inverter enters standby state when the input voltage ranges between 950 V and 1,000 V. The inverter returns to running state once the voltage returns to the MPPT operating voltage range, namely, 200 V to 950 V. • The axial tension on DC connectors must not exceed 80N. Avoid axial cable stress on the connector for a long time during field wiring. • Radial stress or torque must not be generated on PV connectors. It may cause the connector waterproof failure and reduce connector reliability. • Leave at least 50 mm of slack to avoid the external force generated by the cable bending affecting the waterproof performance. • Refer to the specifications provided by the cable manufacturer for the minimum cable bending radius. If the required bending radius is less than 50 mm, reserve a bending radius of 50 mm. If the required bending radius is greater than 50 mm, reserve the required minimum bending radius during wiring.

6.5.1 PV Configuration

- As shown in the figure below, the inverter provides multiple PV inputs. Two PV inputs shares one MPP tracker (MPPT). Specifically, PV1 and PV2 share one MPPT, and PV3 and PV4 share another.
- Each MPPT operates independently, allowing different PV string configurations among MPPT groups, including PV module type, number of modules per string, tilt angle, and installation orientation.
- For optimal system performance, the PV strings connected to the same MPPT (e.g., PV1 and PV2, or PV3 and PV4) should have identical configurations, including module type, number of modules, tilt angle, and installation orientation.

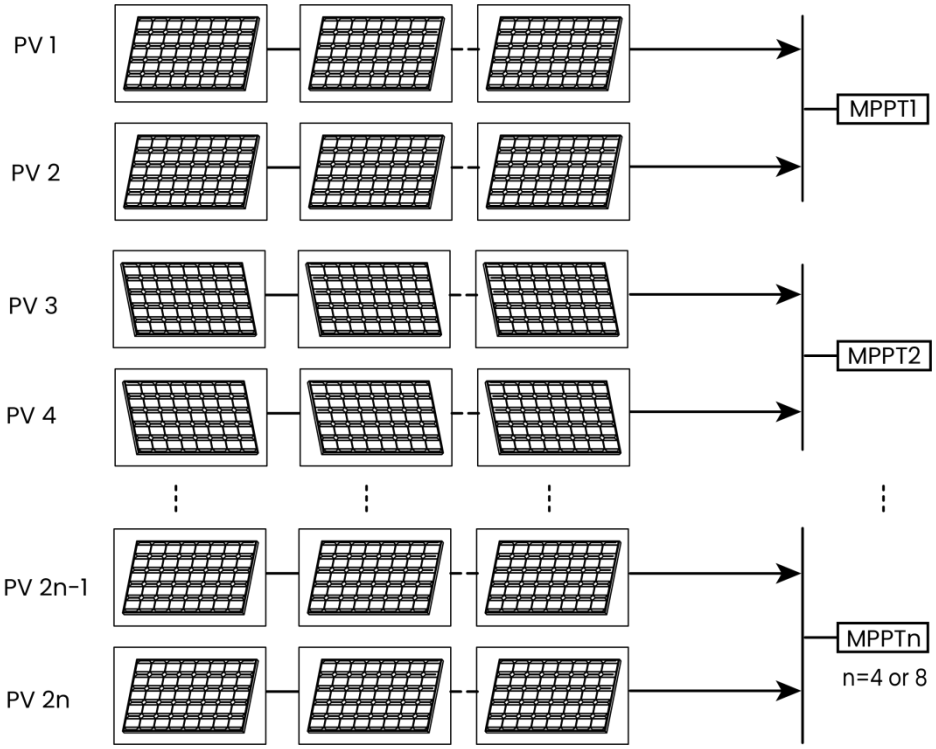

PV Input Terminals Diagram is shown as below:

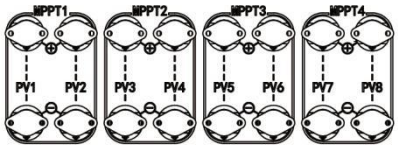

H3-50-Plus, H3-60-Plus,
P3-50-Plus, P3-60-Plus

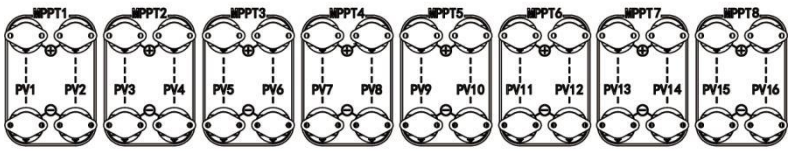

H3-75-Plus, H3-80-Plus, H3-100-Plus, H3-125-Plus,
P3-75-Plus, P3-80-Plus, P3-100-Plus, P3-125-Plus

	Note! If the MPPT is not fully connected, please connect the corresponding strings with reference to the tables below.

H3-50-Plus, H3-60-Plus, P3-50-Plus, P3-60-Plus	
Number of Input Strings	**Terminals**
1	PV7
2	PV5, PV7
3	PV3, PV5, PV7
4	PV1, PV3, PV5, PV7
5	PV1, PV3, PV5, PV7, PV8
6	PV1, PV3, PV5, PV6, PV7, PV8
7	PV1, PV3, PV4, PV5, PV6, PV7, PV8
8	PV1, PV2, PV3, PV4, PV5, PV6, PV7, PV8

H3-75-Plus, H3-80-Plus, H3-100-Plus, H3-125-Plus, P3-75-Plus, P3-80-Plus, P3-100-Plus, P3-125-Plus	
Number of Input Strings	**Terminals**
1	PV7
2	PV7, PV15
3	PV5, PV7, PV15
4	PV5, PV7, PV13, PV15
5	PV3, PV5, PV7, PV13, PV15
6	PV3, PV5, PV7, PV11, PV13, PV15
7	PV1, PV3, PV5, PV7, PV11, PV13, PV15
8	PV1, PV3, PV5, PV7, PV9, PV11, PV13, PV15
9	PV1, PV3, PV5, PV7, PV8, PV9, PV11, PV13, PV15
10	PV1, PV3, PV5, PV7, PV8, PV9, PV11, PV13, PV15, PV16
11	PV1, PV3, PV5, PV6, PV7, PV8, PV9, PV11, PV13, PV15, PV16
12	PV1, PV3, PV5, PV6, PV7, PV8, PV9, PV11, PV13, PV14, PV15, PV16
13	PV1, PV3, PV4, PV5, PV6, PV7, PV8, PV9, PV11, PV13, PV14, PV15, PV16
14	PV1, PV3, PV4, PV5, PV6, PV7, PV8, PV9, PV11, PV12, PV13, PV14, PV15, PV16
15	PV1, PV2, PV3, PV4, PV5, PV6, PV7, PV8, PV9, PV11, PV12, PV13, PV14, PV15, PV16
16	PV1, PV2, PV3, PV4, PV5, PV6, PV7, PV8, PV9, PV10, PV11, PV12, PV13, PV14, PV15, PV16

6.5.2 Assembling DC Connectors

1. Rotate the DC switch to “OFF” position.

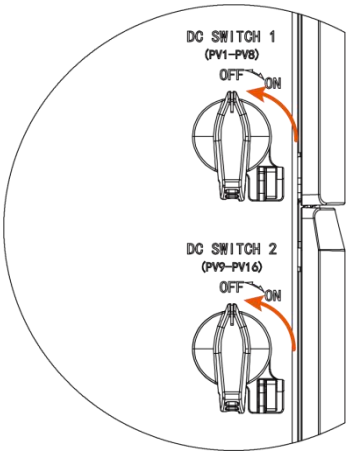

2. Check the cable connection of the PV string for polarity correctness and ensure that the open circuit voltage in any case does not exceed the inverter input limit of 1000 V.

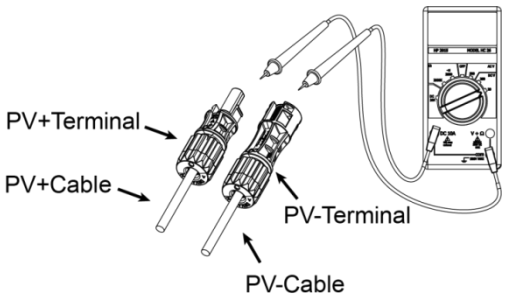

3. Connect the DC connectors to corresponding terminals.

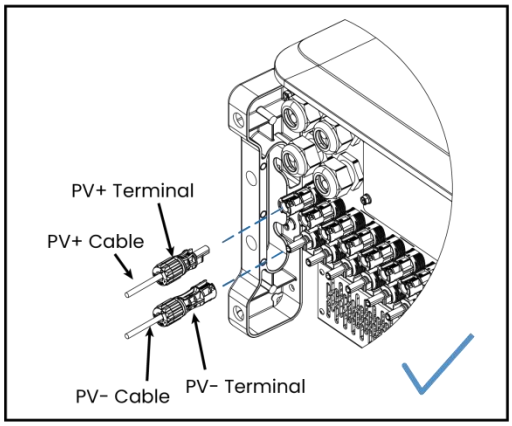

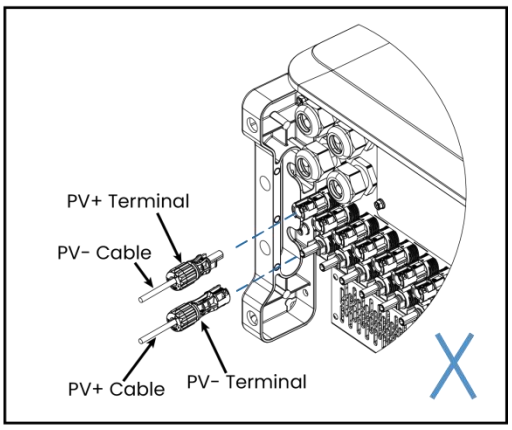

	Note! The multimeter must have a DC voltage range of at least 1000 V. If the voltage is a negative value, the DC input polarity is incorrect. Please correct the DC input polarity. If the voltage is greater than 950 V, too many PV modules are configured to the same string. Please remove some PV modules.

4. Follow the foregoing steps to connect DC connectors of other PV strings.
5. Seal any unused DC terminal with a terminal cap.

6.5.3 DC Wiring

1. Turn off the DC switch.

2. It is recommended that the DC cable dedicated to photovoltaics (4–6 mm²) be used to connect the PV module.

3. Trim about 6 mm of insulation from the cable end.

4. Separate the DC connector as below.

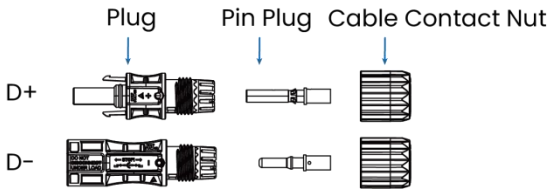

	Note! • Use MC4 DC terminals. • To ensure the reliability of the DC cable connection and the stable operation of the machine, it is essential to use the matching DC connector.

5. Insert multiple cables connected to the PV module into the pin plug and ensure all strands are captured in the pin plug.

6. Crimp the pin plug with a crimping plier.

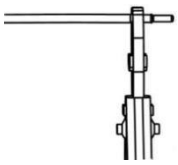

7. Route the crimped cable through the nut into the plug. When you hear a "click", the pin plug is properly clamped in the plug.

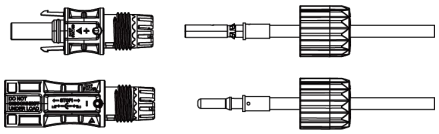

8. Unlock the DC connector.
- Use the specified wrench tool.
- When separating the DC+ connector, push the tool down from the top.
- When separating the DC- connector, push the tool up from the bottom.
- Separate the connectors by hand.

6.5.4 Battery Connection

Step 1: Strip Cable

1. Turn off the DC switch.
2. Choose 16 mm^2 or 25 mm^2 wire to connect the battery.

3. Trim 16 mm of insulation from the wire end.

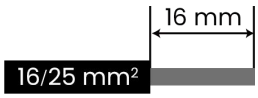

4. Crimp cables with the appropriate tube-type cold-pressed terminals.

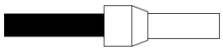

Step 2: Connect Battery

Thread the battery power cables and the battery communication cables through the corresponding cable glands. Then, lock the battery power cables to the corresponding terminals with a 5 mm internal hexagon wrench and plug the battery communication cables into the corresponding communication interfaces.

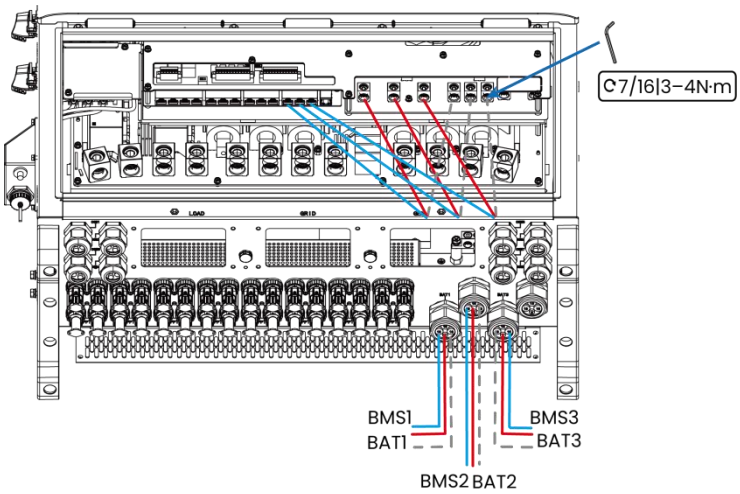

Magnetic Ring Installation

Magnetic rings will improve communication quality. Please install one small magnetic ring on each BMS cable and thread the cable through the ring twice. All battery power cables shall pass through the large magnetic ring once without any additional turns.

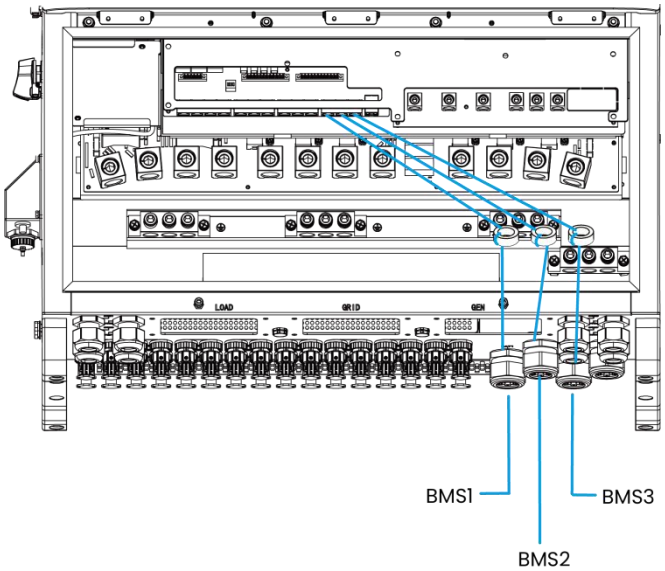

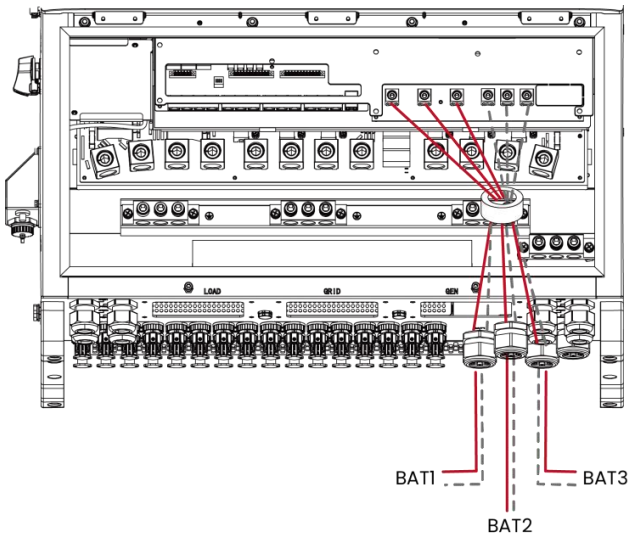

Method 1: Parallel Mode

The inverter's three battery ports (BAT1, BAT2, BAT3) are connected to the three power ports of the same CQ16 battery high-voltage control box. The BMS communication cable of this control box is connected to BMS1 terminal on the inverter.

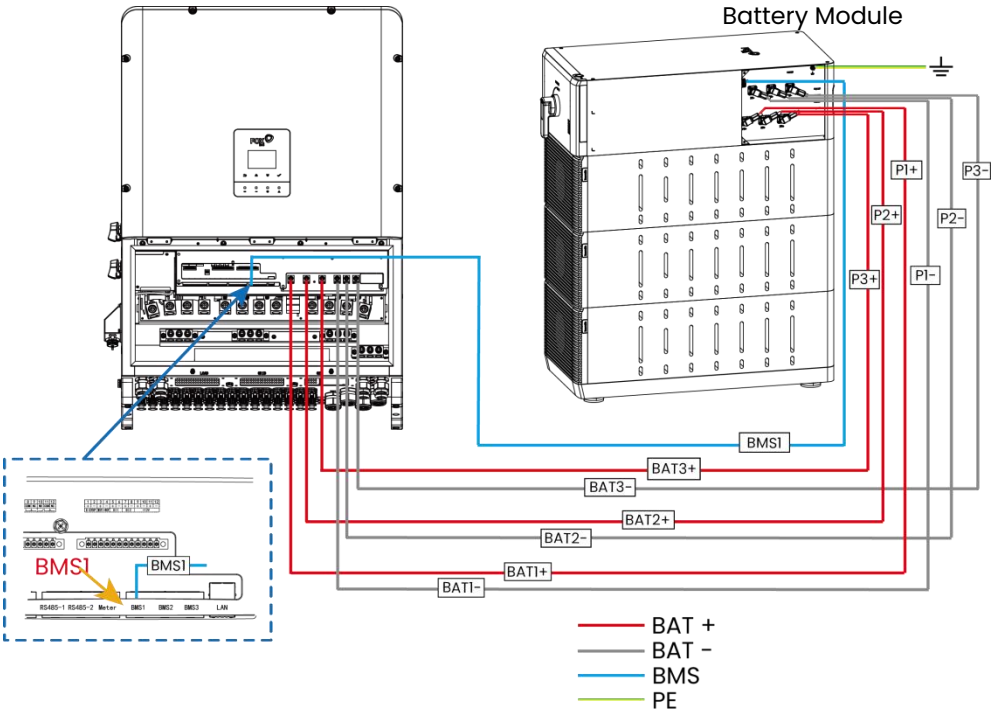

	Note! At present, only the CQ16 battery is equipped with three sets of power ports. Therefore, all other batteries do not support Parallel Mode.

Method 2: Hybrid Mode

Battery modules are connected to the inverter with a combination of parallel and independent connections.

Battery Module 1 is connected to the inverter via 2 parallel battery strings. Specifically, two battery modules are connected in parallel and interfaced with the inverter through 2 sets of DC power cables (BAT1+/BAT1- and BAT2+/BAT2−).

Battery Module 2 is connected to the inverter as a single battery string, using 1 set of DC power cables (BAT3+/BAT3−).

2 BMS lines (BMS1 & BMS3) are directly connected to the inverter to allow individual monitoring and control.

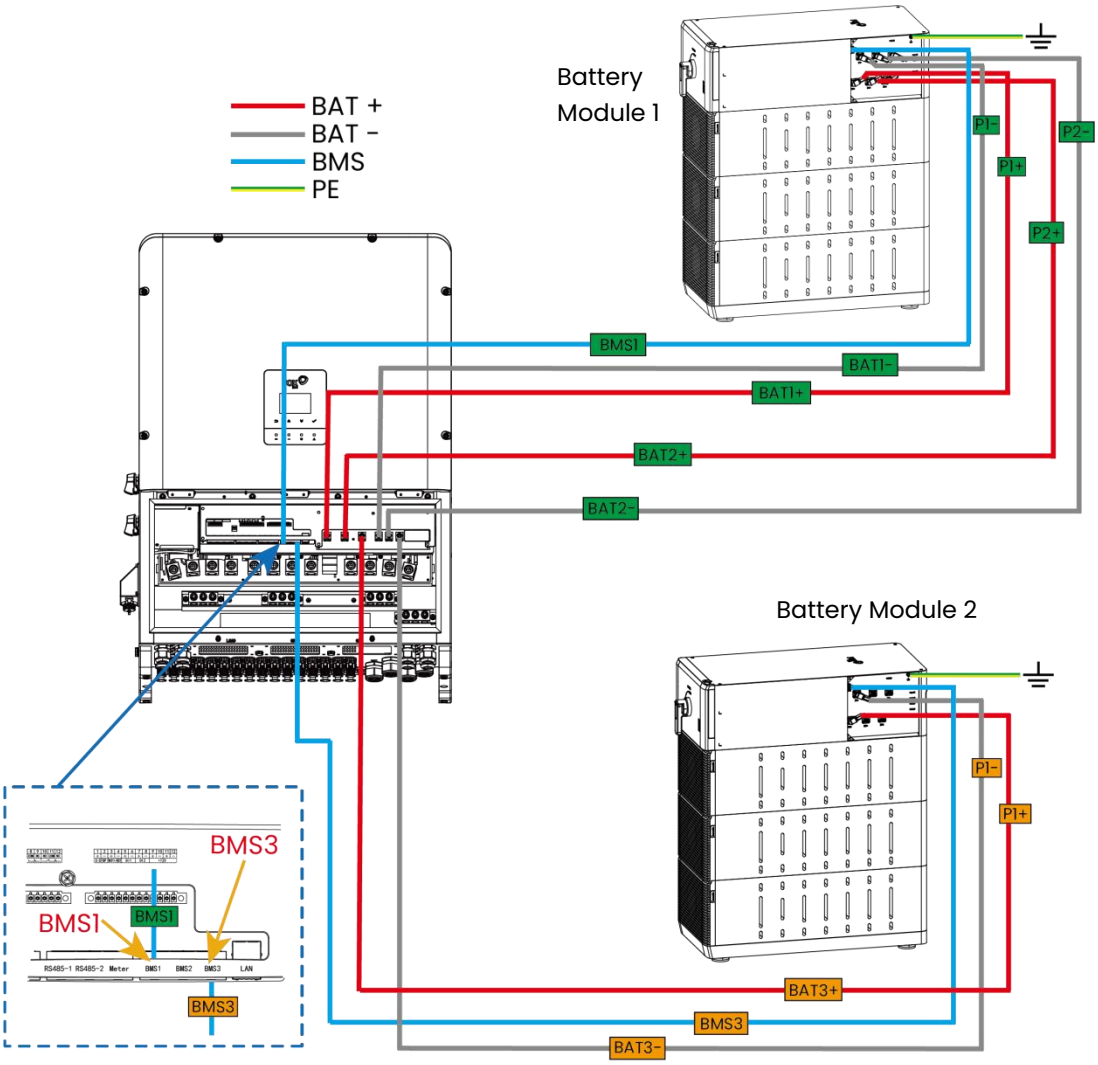

Cable Groups	
for Battery Module 1	BMS1, BAT1+, BAT1-, BAT2+, BAT2-
for Battery Module 2	BMS3, BAT3+, BAT3-

Method 3: Independent Mode

Each battery module (BAT1, BAT2, BAT3) is independently connected to the inverter via power cables and dedicated BMS communication lines. All BMS lines (BMS1–BMS3) are directly connected to the inverter to allow individual monitoring and control.

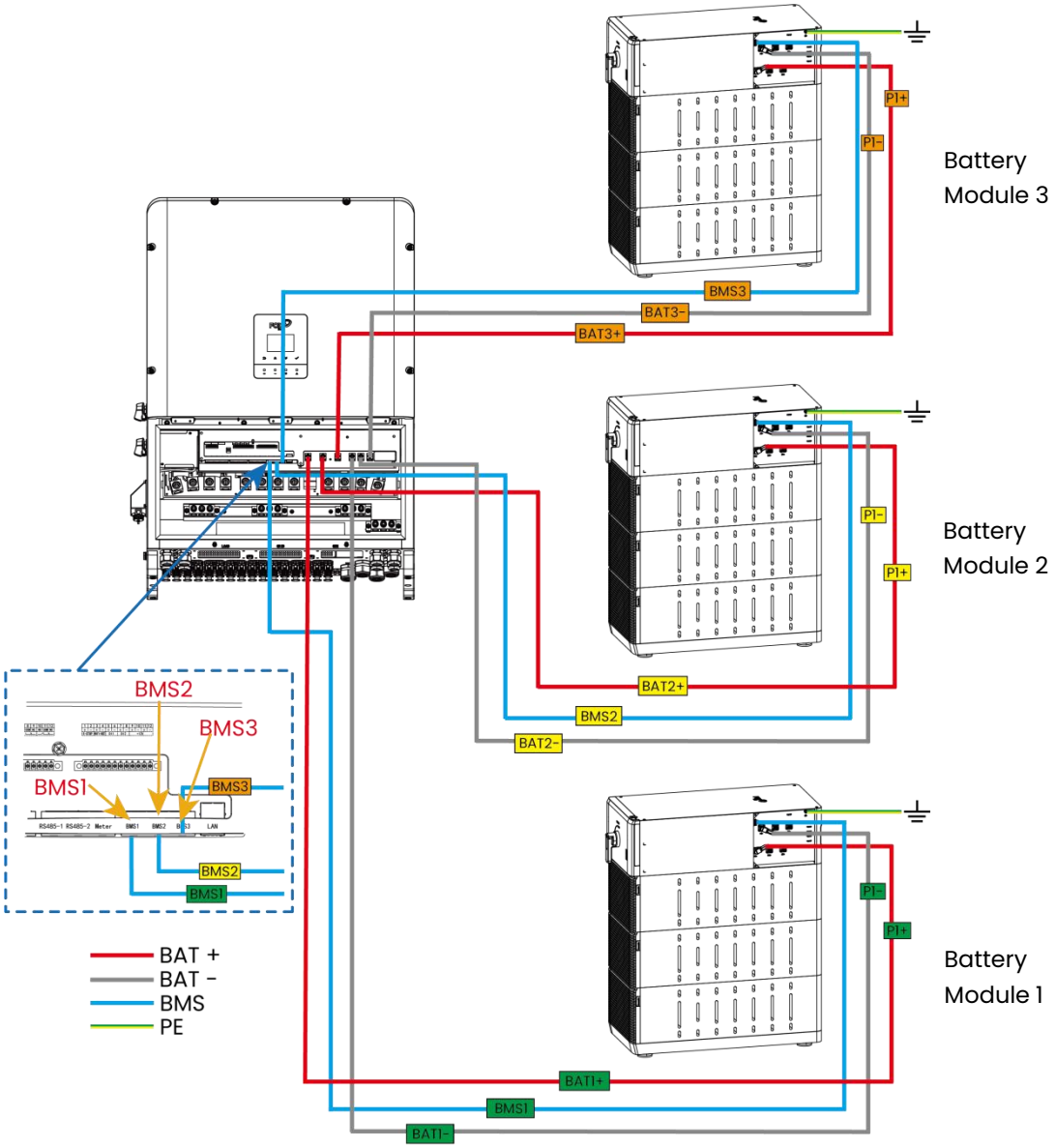

⚠	**Warning!** For each battery module connected to the inverter, the power cables and BMS cable shall be routed from the same battery stack. Cross-mixed wiring will result in abnormal operation.
☞	**Note!** The inverter can be connected to 1, 2, or 3 battery modules. The diagram above illustrates the wiring example for connecting 3 battery modules.

Cable Groups	
for Battery Module 3	BMS3, BAT3+, BAT3-
for Battery Module 2	BMS2, BAT2+, BAT2-
for Battery Module 1	BMS1, BAT1+, BAT1-

Battery Pack Configurations

CQ16

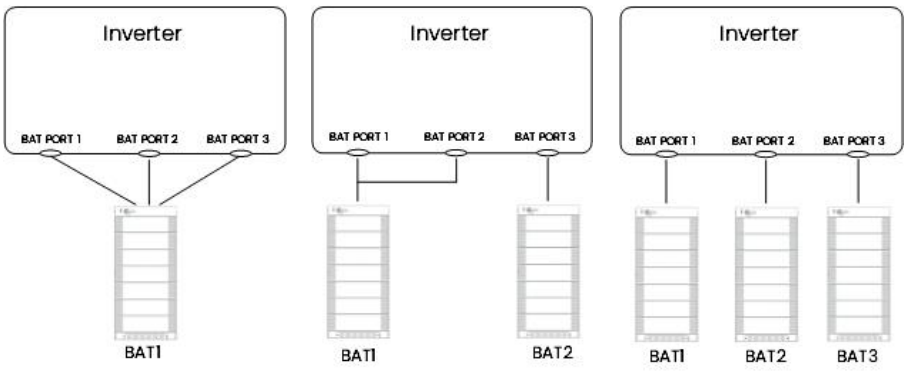

1 Stack **2 Stacks** **3 Stacks**

Please refer to the table below for **CQ16** battery pack configurations.

Packs	Capacity (kWh)	Stack 1	Stack 2	Stack 3	Power (kW)	Composition
4	64.31	4	0	0	49.15	Control Box*1+CQ16*4
5	80.38	5	0	0	61.44	Control Box*1+CQ16*5
6	96.46	6	0	0	73.73	Control Box*1+CQ16*6
7	112.54	7	0	0	86.02	Control Box*1+CQ16*7
8	128.61	8	0	0	98.30	Control Box*1+CQ16*8
9	144.69	9	0	0	110.59	Control Box*1+CQ16*9
10	160.77	10	0	0	122.88	Control Box*1+CQ16*10
11	176.84	11	0	0	135.17	Control Box*1+CQ16*11
12	192.92	12	0	0	147.46	Control Box*1+CQ16*12
13	209.00	13	0	0	159.74	Control Box*1+CQ16*13
14	225.08	14	0	0	172.03	Control Box*1+CQ16*14
15	241.15	15	0	0	184.32	Control Box*1+CQ16*15
16	257.23	10	6	0	106.50	Control Box*2+CQ16*16
17	273.31	11	6	0	114.69	Control

						Box*2+CQ16*17
18	289.38	12	6	0	122.88	Control Box*2+CQ16*18
19	305.46	13	6	0	131.07	Control Box*2+CQ16*19
20	321.54	14	6	0	139.26	Control Box*2+CQ16*20
21	337.61	14	7	0	143.36	Control Box*2+CQ16*21
22	353.69	14	8	0	147.46	Control Box*2+CQ16*22
23	369.77	14	9	0	151.55	Control Box*2+CQ16*23
24	385.84	14	10	0	155.65	Control Box*2+CQ16*24
25	401.92	14	11	0	159.74	Control Box*2+CQ16*25
26	418.00	14	12	0	163.84	Control Box*2+CQ16*26
27	434.07	9	9	9	110.59	Control Box*3+CQ16*27
28	450.15	10	9	9	114.69	Control Box*3+CQ16*28
29	466.23	10	10	9	118.78	Control Box*3+CQ16*29
30	482.30	10	10	10	122.88	Control Box*3+CQ16*30
31	498.38	11	10	10	126.98	Control Box*3+CQ16*31
32	514.46	11	11	10	131.07	Control Box*3+CQ16*32
33	530.53	11	11	11	135.17	Control Box*3+CQ16*33
34	546.61	12	11	11	139.26	Control Box*3+CQ16*34
35	562.69	12	12	11	143.36	Control Box*3+CQ16*35
36	578.76	12	12	12	147.46	Control Box*3+CQ16*36
37	594.84	13	12	12	151.55	Control Box*3+CQ16*37
38	610.92	13	13	12	155.65	Control Box*3+CQ16*38

39	627.00	13	13	13	159.74	Control Box*3+CQ16*39
40	643.07	14	13	13	163.84	Control Box*3+CQ16*40
41	659.15	14	14	13	167.94	Control Box*3+CQ16*41
42	675.23	14	14	14	172.03	Control Box*3+CQ16*42
43	691.30	15	14	14	176.13	Control Box*3+CQ16*43
44	707.38	15	15	14	180.22	Control Box*3+CQ16*44
45	723.46	15	15	15	184.32	Control Box*3+CQ16*45

CQ6, CQ6.6, DQ6.6, CQ7, and CQ7-80

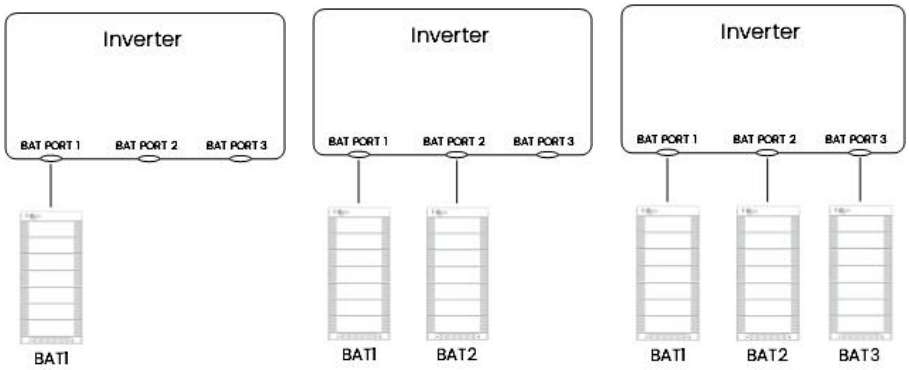

1 Stack **2 Stacks** **3 Stacks**

Please refer to the table below for the battery pack configurations of **CQ7, CQ7-80, CQ6.6, and DQ6.6**.

Packs	Capacity (kWh)	Stack 1	Stack 2	Stack 3	Power (kW)	Composition (CQX: CQ7/CQ7-80/CQ6.6 /DQ6.6)
4	CQ7: 27.84 CQ7-80: 28.08 CQ6.6/DQ6.6: 26.48	4	0	0	18.43	CQX-M*1+CQX-S*3
5	CQ7: 34.80 CQ7-80: 35.10 CQ6.6/DQ6.6: 33.10	5	0	0	23.04	CQX-M*1+CQX-S*4
6	CQ7: 41.76 CQ7-80: 42.12 CQ6.6/DQ6.6:	6	0	0	27.65	CQX-M*1+CQX-S*5

	39.72					
7	CQ7: 48.72 CQ7-80: 49.14 CQ6.6/DQ6.6: 46.34	7	0	0	32.26	CQX-M*1+CQX-S*6
8	CQ7: 55.68 CQ7-80: 56.16 CQ6.6/DQ6.6: 52.96	8	0	0	36.86	CQX-M*1+CQX-S*7
9	CQ7: 62.64 CQ7-80: 63.18 CQ6.6/DQ6.6: 59.58	9	0	0	41.47	CQX-M*1+CQX-S*8
10	CQ7: 69.60 CQ7-80: 70.20 CQ6.6/DQ6.6: 66.20	10	0	0	46.08	CQX-M*1+CQX-S*9
11	CQ7: 76.56 CQ7-80: 77.22 CQ6.6/DQ6.6: 72.82	11	0	0	50.69	CQX-M*1+CQX-S*10
12	CQ7: 83.52 CQ7-80: 84.24 CQ6.6/DQ6.6: 79.44	12	0	0	55.30	CQX-M*1+CQX-S*11
13	CQ7: 90.48 CQ7-80: 91.26 CQ6.6/DQ6.6: 86.06	13	0	0	59.90	CQX-M*1+CQX-S*12
14	CQ7: 97.44 CQ7-80: 98.28 CQ6.6/DQ6.6: 92.68	7	7	0	64.51	CQX-M*2+CQX-S*12
15	CQ7: 104.40 CQ7-80: 105.30 CQ6.6/DQ6.6: 99.30	8	7	0	69.12	CQX-M*2+CQX-S*13
16	CQ7: 111.36 CQ7-80: 112.32 CQ6.6/DQ6.6: 105.92	8	8	0	73.73	CQX-M*2+CQX-S*14
17	CQ7: 118.32 CQ7-80: 119.34 CQ6.6/DQ6.6:	9	8	0	78.34	CQX-M*2+CQX-S*15

	112.54					
18	CQ7: 125.28 CQ7-80: 126.36 CQ6.6/DQ6.6: 119.16	9	9	0	82.94	CQX-M*2+CQX-S*16
19	CQ7: 132.24 CQ7-80: 133.38 CQ6.6/DQ6.6: 125.78	10	9	0	87.55	CQX-M*2+CQX-S*17
20	CQ7: 139.20 CQ7-80: 140.40 CQ6.6/DQ6.6: 132.40	10	10	0	92.16	CQX-M*2+CQX-S*18
21	CQ7: 146.16 CQ7-80: 147.42 CQ6.6/DQ6.6: 139.02	11	10	0	96.77	CQX-M*2+CQX-S*19
22	CQ7: 153.12 CQ7-80: 154.44 CQ6.6/DQ6.6: 145.64	11	11	0	101.38	CQX-M*2+CQX-S*20
23	CQ7: 160.08 CQ7-80: 161.46 CQ6.6/DQ6.6: 152.26	12	11	0	105.98	CQX-M*2+CQX-S*21
24	CQ7: 167.04 CQ7-80: 168.48 CQ6.6/DQ6.6: 158.88	12	12	0	110.59	CQX-M*2+CQX-S*22
25	CQ7: 174.00 CQ7-80: 175.50 CQ6.6/DQ6.6: 165.50	13	12	0	115.20	CQX-M*2+CQX-S*23
26	CQ7: 180.96 CQ7-80: 182.52 CQ6.6/DQ6.6: 172.12	13	13	0	119.81	CQX-M*2+CQX-S*24
27	CQ7: 187.92 CQ7-80: 189.54 CQ6.6/DQ6.6: 178.74	9	9	9	124.42	CQX-M*3+CQX-S*24
28	CQ7: 194.88 CQ7-80: 196.56 CQ6.6/DQ6.6:	10	9	9	129.02	CQX-M*3+CQX-S*25

	185.36					
29	CQ7: 201.84 CQ7-80: 203.58 CQ6.6/DQ6.6: 191.98	10	10	9	133.63	CQX-M*3+CQX-S*26
30	CQ7: 208.80 CQ7-80: 210.60 CQ6.6/DQ6.6: 198.60	10	10	10	138.24	CQX-M*3+CQX-S*27
31	CQ7: 215.76 CQ7-80: 217.62 CQ6.6/DQ6.6: 205.22	11	10	10	142.85	CQX-M*3+CQX-S*28
32	CQ7: 222.72 CQ7-80: 224.64 CQ6.6/DQ6.6: 211.84	11	11	10	147.46	CQX-M*3+CQX-S*29
33	CQ7: 229.68 CQ7-80: 231.66 CQ6.6/DQ6.6: 218.46	11	11	11	152.06	CQX-M*3+CQX-S*30
34	CQ7: 236.64 CQ7-80: 238.68 CQ6.6/DQ6.6: 225.08	12	11	11	156.67	CQX-M*3+CQX-S*31
35	CQ7: 243.60 CQ7-80: 245.70 CQ6.6/DQ6.6: 231.70	12	12	11	161.28	CQX-M*3+CQX-S*32
36	CQ7: 250.56 CQ7-80: 252.72 CQ6.6/DQ6.6: 238.32	12	12	12	165.89	CQX-M*3+CQX-S*33
37	CQ7: 257.52 CQ7-80: 259.74 CQ6.6/DQ6.6: 244.94	13	12	12	170.50	CQX-M*3+CQX-S*34
38	CQ7: 264.48 CQ7-80: 266.76 CQ6.6/DQ6.6: 251.56	13	13	12	175.10	CQX-M*3+CQX-S*35
39	CQ7: 271.44 CQ7-80: 273.78 CQ6.6/DQ6.6:	13	13	13	179.71	CQX-M*3+CQX-S*36

	258.18					
40	CQ7: 278.40 CQ7-80: 280.80 CQ6.6/DQ6.6: 264.80	14	13	13	184.32	CQX-M*3+CQX-S*37
41	CQ7: 285.36 CQ7-80: 287.82 CQ6.6/DQ6.6: 271.42	14	14	13	188.93	CQX-M*3+CQX-S*38
42	CQ7: 292.32 CQ7-80: 294.84 CQ6.6/DQ6.6: 278.04	14	14	14	193.54	CQX-M*3+CQX-S*39

Please refer to the table below for **CQ6** battery pack configurations.

Packs	Capacity (kWh)	Stack 1	Stack 2	Stack 3	Power (kW)	Composition
4	23.96	4	0	0	18.43	CQ6-M*1+CQ6-S*3
5	29.95	5	0	0	23.04	CQ6-M*1+CQ6-S*4
6	35.94	6	0	0	27.65	CQ6-M*1+CQ6-S*5
7	41.93	7	0	0	32.26	CQ6-M*1+CQ6-S*6
8	47.92	8	0	0	36.86	CQ6-M*1+CQ6-S*7
9	53.91	9	0	0	41.47	CQ6-M*1+CQ6-S*8
10	59.90	10	0	0	46.08	CQ6-M*1+CQ6-S*9
11	65.89	11	0	0	50.69	CQ6-M*1+CQ6-S*10
12	71.88	12	0	0	55.30	CQ6-M*1+CQ6-S*11
13	77.87	13	0	0	59.90	CQ6-M*1+CQ6-S*12
14	83.86	7	7	0	64.51	CQ6-M*2+CQ6-S*12
15	89.85	8	7	0	69.12	CQ6-M*2+CQ6-S*13
16	95.84	8	8	0	73.73	CQ6-M*2+CQ6-S*14
17	101.83	9	8	0	78.34	CQ6-M*2+CQ6-S*15
18	107.82	9	9	0	82.94	CQ6-M*2+CQ6-S*16
19	113.81	10	9	0	87.55	CQ6-M*2+CQ6-S*17
20	119.80	10	10	0	92.16	CQ6-M*2+CQ6-S*18
21	125.79	11	10	0	96.77	CQ6-M*2+CQ6-S*19
22	131.78	11	11	0	101.38	CQ6-M*2+CQ6-S*20
23	137.77	12	11	0	105.98	CQ6-M*2+CQ6-S*21
24	143.76	12	12	0	110.59	CQ6-M*2+CQ6-S*22
25	149.75	13	12	0	115.20	CQ6-M*2+CQ6-S*23
26	155.74	13	13	0	119.81	CQ6-M*2+CQ6-S*24
27	161.73	9	9	9	124.42	CQ6-M*3+CQ6-S*24
28	167.72	10	9	9	129.02	CQ6-M*3+CQ6-S*25
29	173.71	10	10	9	133.63	CQ6-M*3+CQ6-S*26
30	179.70	10	10	10	138.24	CQ6-M*3+CQ6-S*27

31	185.69	11	10	10	142.85	CQ6-M*3+CQ6-S*28
32	191.68	11	11	10	147.46	CQ6-M*3+CQ6-S*29
33	197.67	11	11	11	152.06	CQ6-M*3+CQ6-S*30
34	203.66	12	11	11	156.67	CQ6-M*3+CQ6-S*31
35	209.65	12	12	11	161.28	CQ6-M*3+CQ6-S*32
36	215.64	12	12	12	165.89	CQ6-M*3+CQ6-S*33
37	221.63	13	12	12	170.50	CQ6-M*3+CQ6-S*34
38	227.62	13	13	12	175.10	CQ6-M*3+CQ6-S*35
39	233.61	13	13	13	179.71	CQ6-M*3+CQ6-S*36
40	239.60	14	13	13	184.32	CQ6-M*3+CQ6-S*37
41	245.59	14	14	13	188.93	CQ6-M*3+CQ6-S*38
42	251.58	14	14	14	193.54	CQ6-M*3+CQ6-S*39

6.5.5 Antenna Connection

Remove the antenna sealing cap, and screw the antenna into the WiFi antenna port on the inverter.

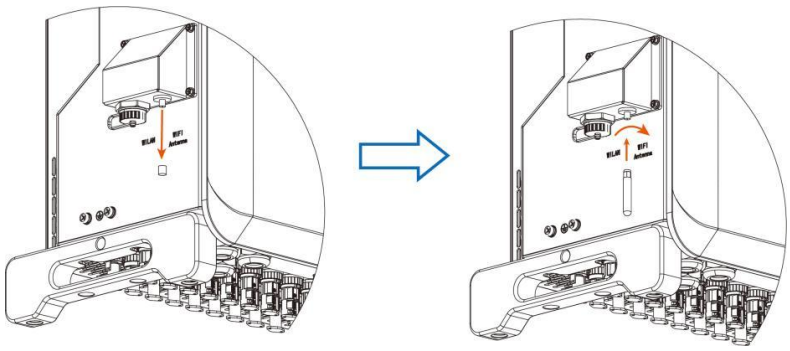

	Note! To ensure stable antenna operation, the antenna locking nut must be securely tightened.

6.6 Communication Device Installation

The inverter offers various communication options, such as WiFi, LAN, RS485, and connection to a smart meter. Operational data such as voltage, current, and other parameters can be monitored locally or remotely.

6.6.1 Monitoring Module

6.6.1.1 Download FoxCloud APP 2.0

Please download the FoxCloud APP 2.0 from Apple store or Google store.

Download on the App Store

GET IT ON Google Play

6.6.1.2 Internet Connection

☞	**Note!** • The inverter has a built-in WiFi module which can be used to connect to internet and collect data. • After connecting to the internet, please go to FoxCloud APP 2.0 to create account and plant. • Please make sure the inverter is powered on and started, and wait for 1 minute to start the WiFi configuration.

Method 1: APP Configuration

1. Open the APP, click "Local Distribution Network" on the login page.

2. Click "Wifi Config".

3. San the SN QR code on the inverter's label or enter the SN code manually.

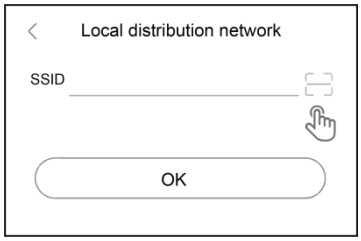

4. Connect the device with built-in WiFi module. The SSID of the built-in WiFi module is "W-XXXXXXX", and the default password is "mtmt2020".

Method 2: Web Configuration

1. Connect the device with built-in WiFi module. The SSID of the WiFi module is "W-XXXXXXX", and the default password is "mtmt2020".

2. After connecting successfully. Open browser and enter "https://192.168.1.1" on the address bar on the top.

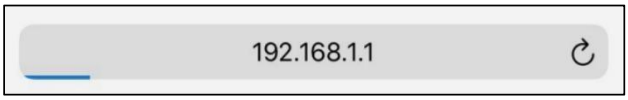

3. Create account and login.

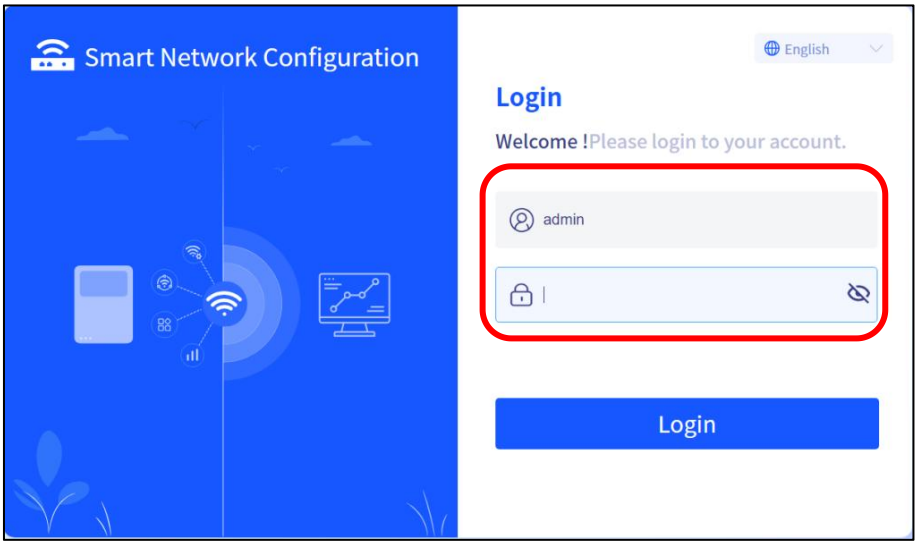

	Note! The default password is "mtmt2020". After logging in, please change the password and log in again using the new one.

4. Click "WiFi Configuration", and scroll down the WiFi Setting SSID menu to find house

router and input the house router's password. Click "Submit".

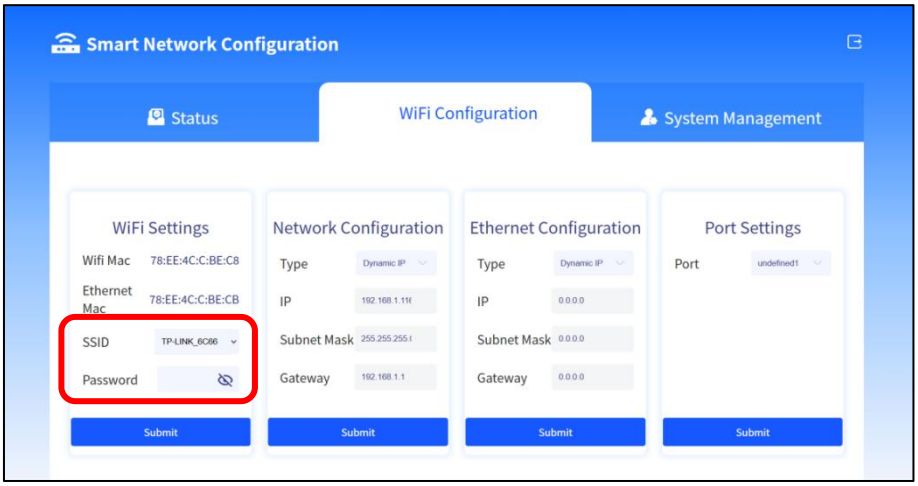

	Note! Please go to FoxCloud APP 2.0 to create account and plant.

6.6.1.3 Create Account and Plant

1. Open FoxCloud APP 2.0 and make sure your phone's Bluetooth is on.
2. Follow the APP's setup wizard to complete the following steps.

- **Step 1**: Create an account and login.

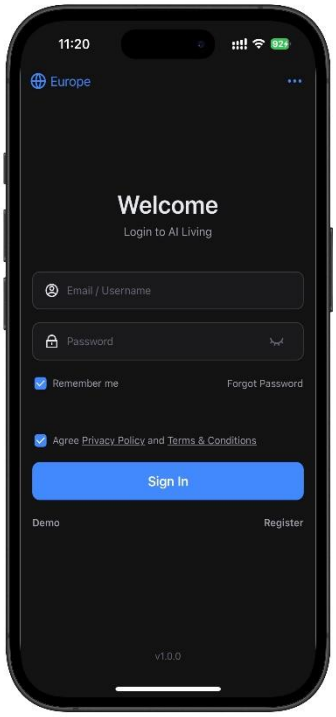

- **Step 2**: Create a plant.

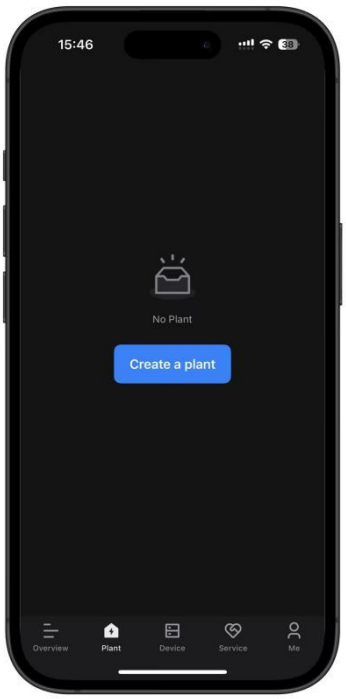

- **Step 3**: Wait for the system to search for devices. Once the search is complete, tap "Add Devices". (You can also scan the QR code on your device or enter the SN manually.)

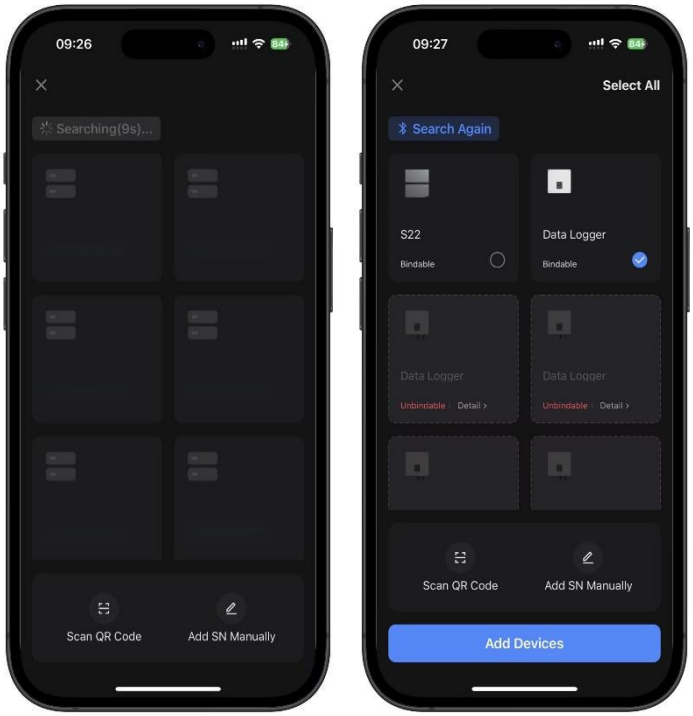

- **Step 4**: Please fill in the remaining information. And tap "Complete".

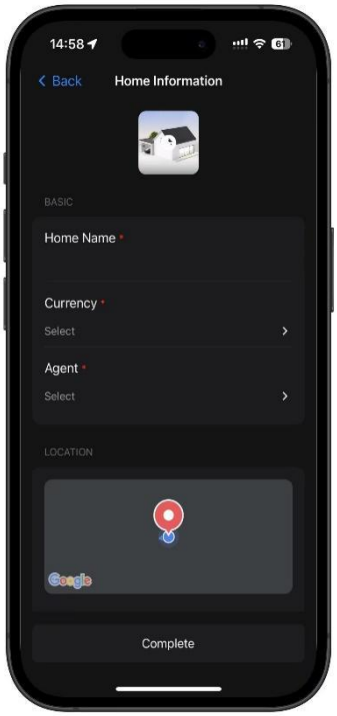

- **Step 5**: After the plant is created, please note that it may need to wait for 3–5 minutes to upload inverters data.

6.6.2 Meter Connection

6.6.2.1 Grid Meter

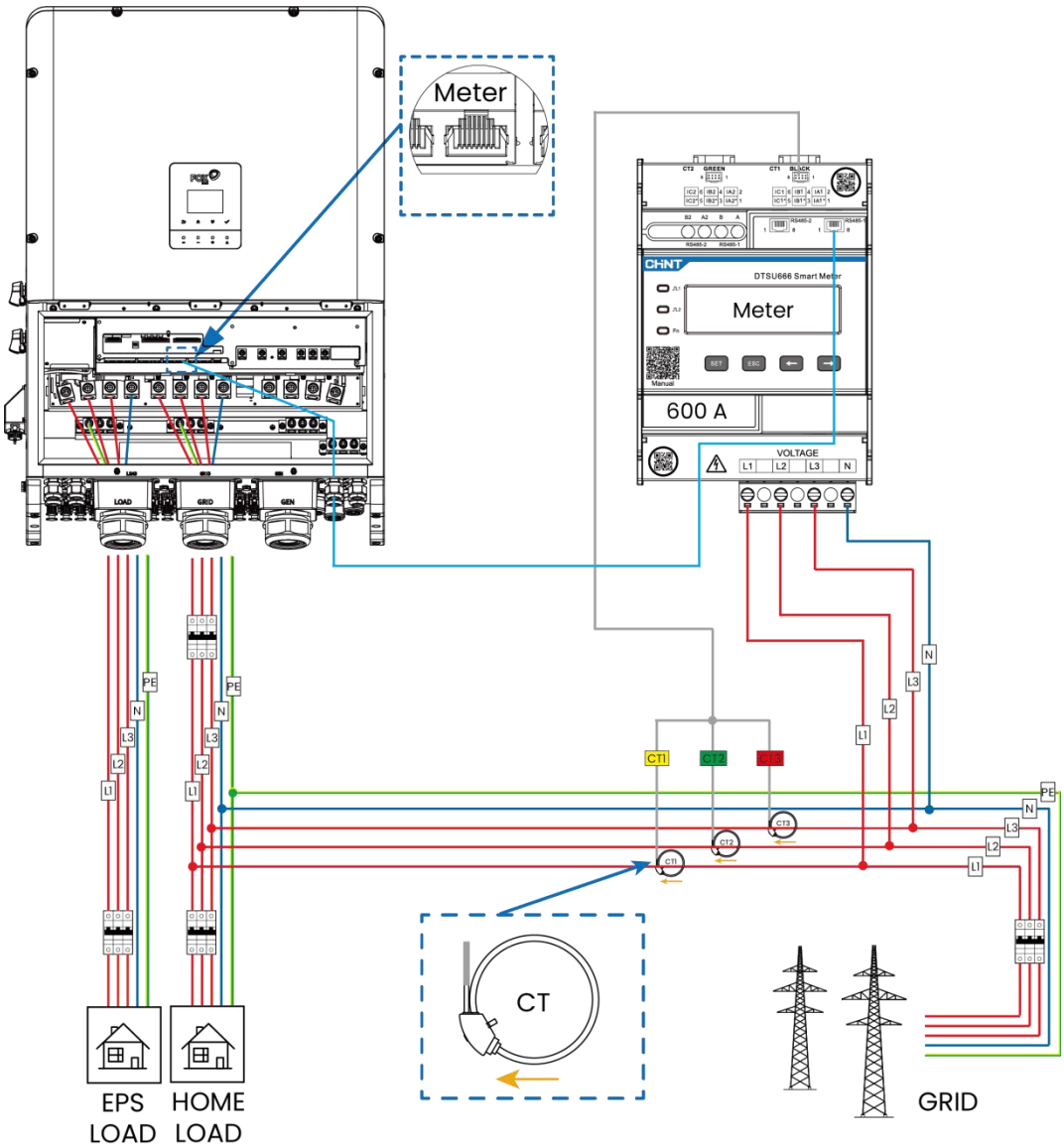

	Note! The inverter is equipped with a 600 A CHNT smart meter, which must only be used with the CT supplied in the accessory kit. Do not use CTs of other models, as this may result in operational failures.

6.6.2.2 AC Couple Meter

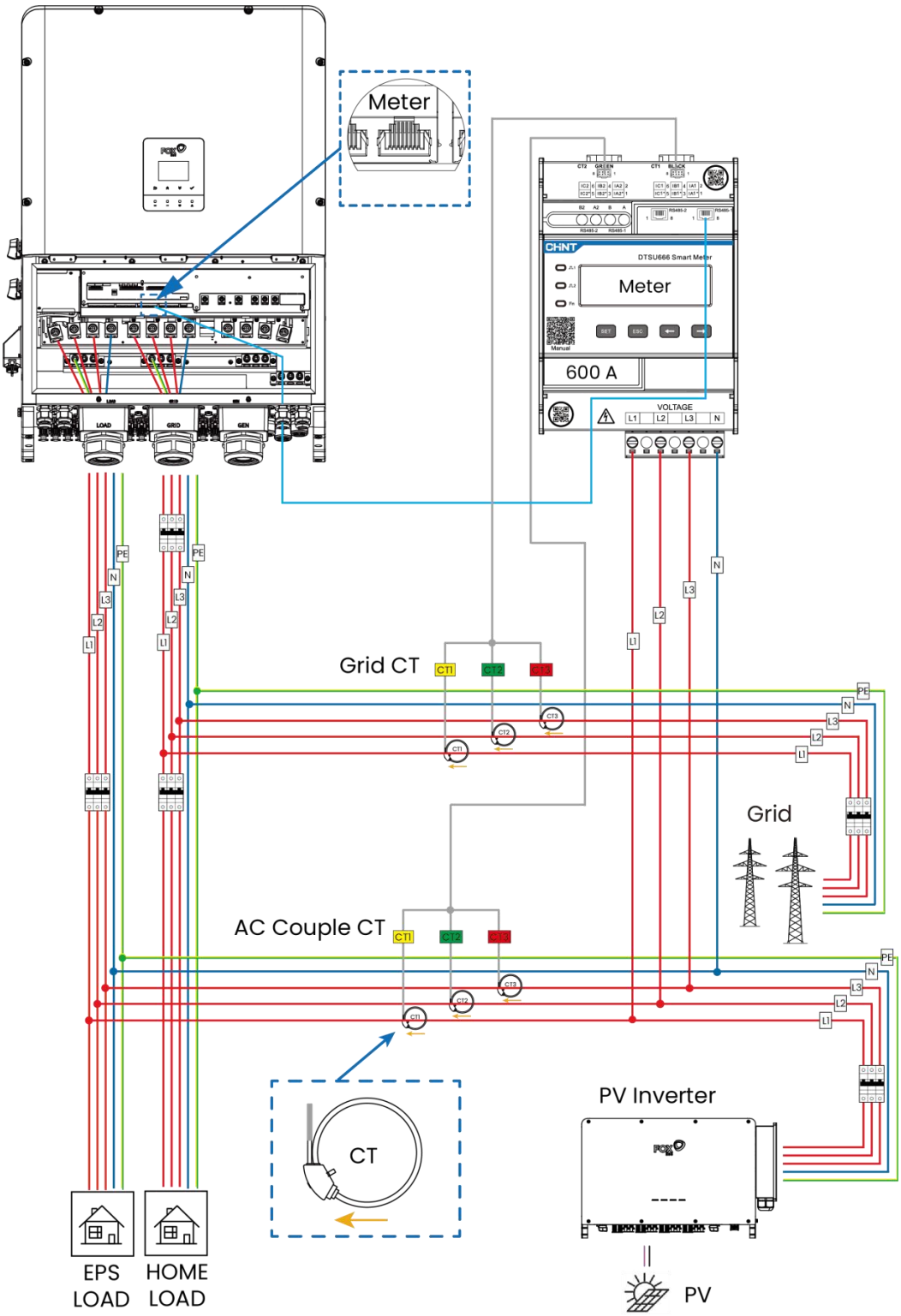

- Communication Connection:
  - Connect the Meter to the inverter's Meter terminal with an RJ45 communication cable.
  - Ensure the communication cable follows the specified pin out sequence to guarantee reliable data transmission.
  - The communication interface on the inverter is located at the bottom terminal block area.

- Power Connection:
  - Connect the grid power lines (L1, L2, L3, N, PE) to the corresponding input terminals on the inverter.
  - Connect the EPS LOAD (emergency load) power lines (L1, L2, L3, N, PE) to the designated EPS terminals on the inverter.
  - Ensure that the AC output lines from the inverter are properly matched with the utility grid and load wiring.
- CT (Current Transformer) Connection:
  - Install CTs to monitor real-time current flow.
  - The CT connection leads are routed to the meter, ensuring correct phase sequence and orientation.
  - Arrow on CT should point toward the load side.
- Grounding:
  - PE (Protective Earth) wires must be securely connected.
  - Proper grounding ensures system safety and compliance with electrical standards.
- Wiring Precautions:
  - Confirm all wiring connections are tight and well-insulated before powering on the system.
  - Double-check phase alignment (L1, L2, L3) between the meter, inverter, and the utility grid.
  - Ensure that the communication cable is properly shielded to avoid interference.
  - Use appropriately sized cables according to system current ratings.

6.6.3 Multiple Inverters Connection

☞	**Note!** • The sum of the cable length from each inverter to the grid (or the generator) plus the cable length from that same inverter to the load shall be identical. • The cable diameters of a 1, b 1, a 2, b 2,..., a N, b N shall be the same.

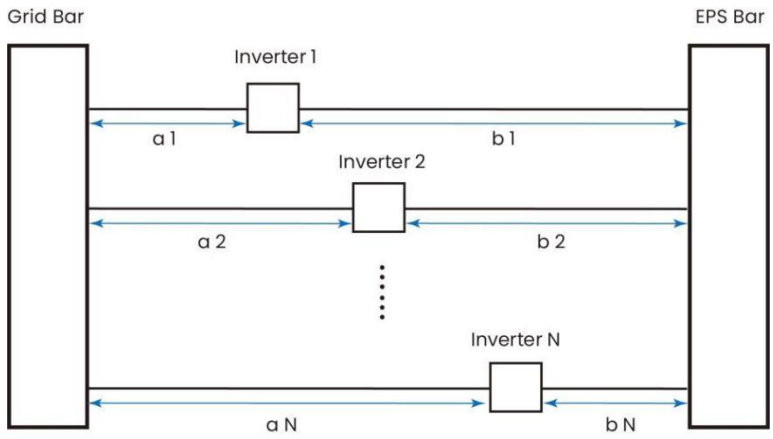

a 1 + b 1 = a 2 + b 2 = ... = a N + b N

6.6.3.1 Parallel Inverter Systems

Scenario 1: Grid Tied Parallel Inverter System

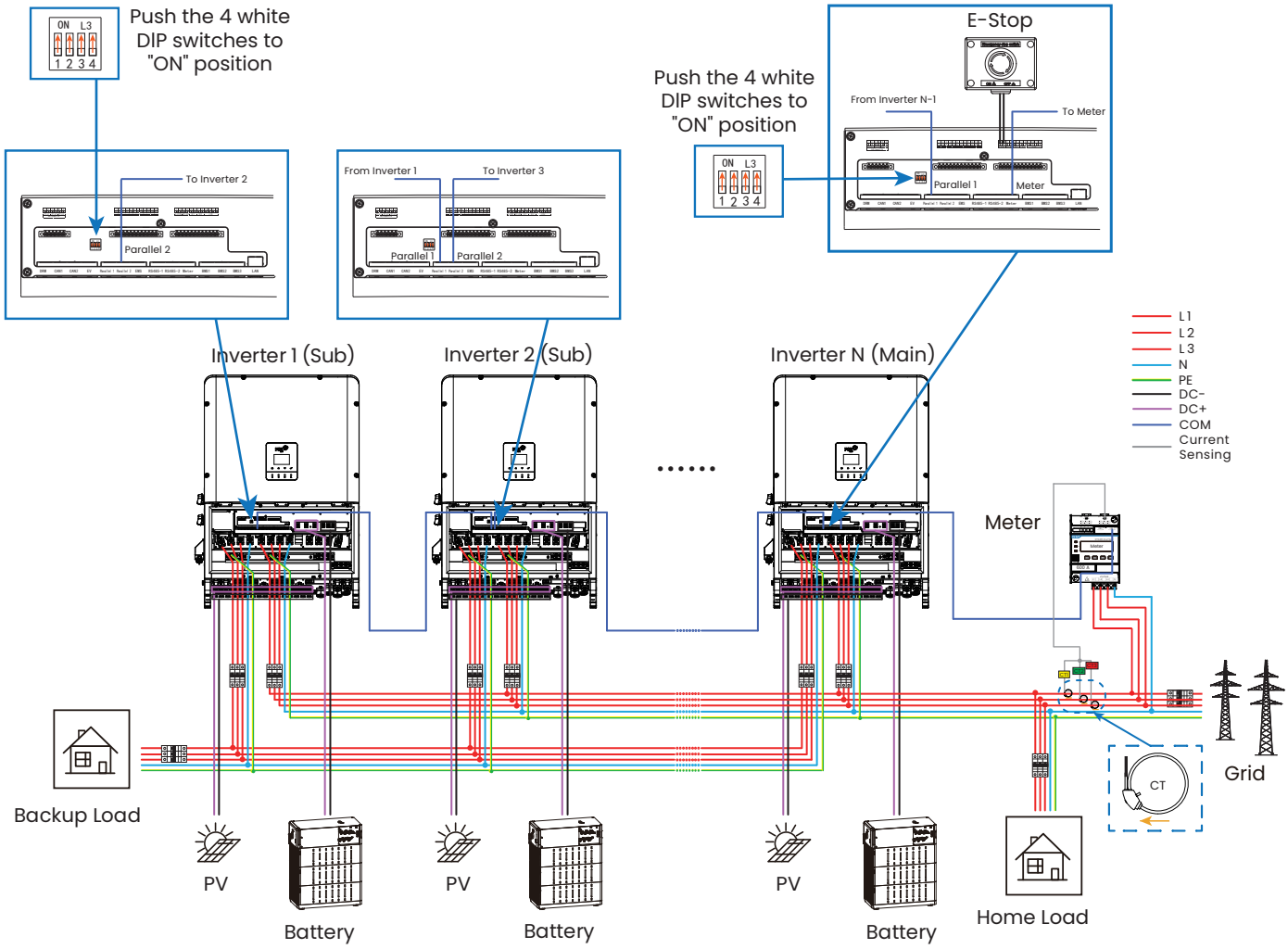

1. **Connect the meter and CT according to "6.6.2 Meter Connection". And the Meter should be connected to the main inverter's Meter port.**
2. Please use twisted-pair network cable as the communication cable.
3. Turn on the DIP switches on the first and last inverters, and turn off those on the remaining inverters.
4. Make sure the E-Stop switch remains in the open state.
5. When multiple inverters are connected in parallel, the Meter and the E-Stop switch should be connected to the main inverter.
6. Configure the parameters according to "6.6.3.2 Parallel Inverter Parameters Configuration".
7. Please connect to a reliable network to ensure the equipment is online.
8. When multiple inverters are connected in parallel, if one of them is energized, all other inverters connected in parallel with it may also be energized.
9. Each inverter should be of the same model, and ideally, the same number of batteries and the same number of photovoltaic panels should be configured.
10. (1) For 2 parallel inverters: Use the 600A meter and CT included in the accessory kit.
    (2) For 3+ parallel inverters: Use a user-supplied 3000A meter and CT.
    (3) Do not mix components or use third-party CTs. Meters and CTs must have matching current ratings.
11. When the number of paralleled inverters is 6–10 units, the wiring becomes more complex. For details, please consult CSA technicians.
12. Power on the inverters according to "8.2 Inverter Start-Up".

Scenario 2: Generator Tied Parallel Inverter System

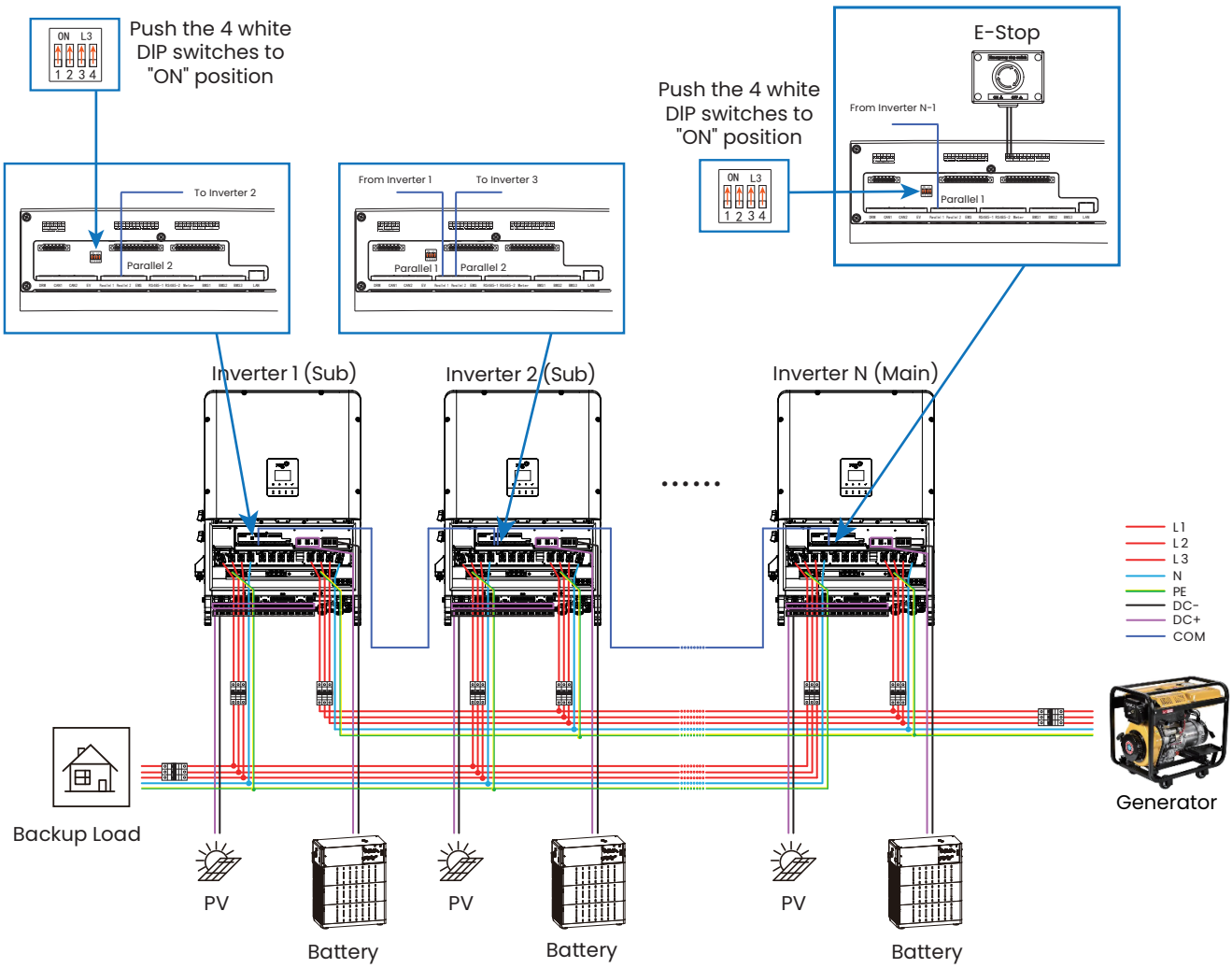

1. Connect the generator according to “7.2.1 Generator Wiring”. And the signal line for controlling the generator should be connected to the main inverter.
2. Please use twisted-pair network cable as the communication cable.
3. Turn on the DIP switches on the first and last inverters, and turn off those on the remaining inverters.
4. Make sure the E-Stop switch remains in the open state.
5. When multiple inverters are connected in parallel, the E-Stop switch should be connected to the main inverter.
6. Configure the parameters according to “6.6.3.2 Parallel Inverter Parameters Configuration”.
7. Please connect to a reliable network to ensure the equipment is online.
8. When multiple inverters are connected in parallel, if one of them is energized, all other inverters connected in parallel with it may also be energized.
9. Each inverter should be of the same model, and ideally, the same number of batteries and the same number of photovoltaic panels should be configured.
10. When the number of paralleled inverters is 6–10 units, the wiring becomes more complex. For details, please consult CSA technicians.
11. Power on the inverters according to “8.2 Inverter Start-Up”

Scenario3: Grid & Generator Tied Parallel Inverter System

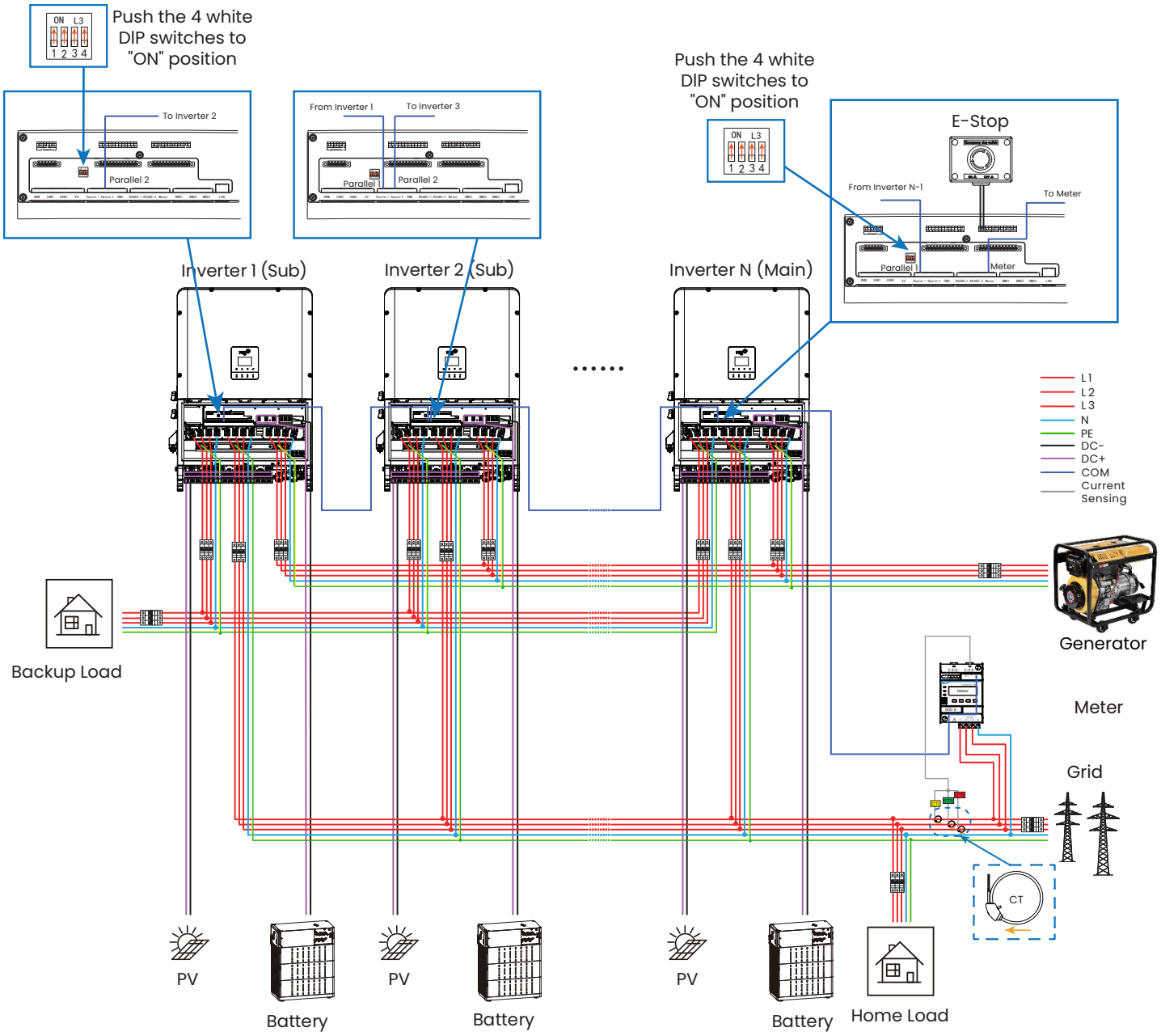

1. **Connect the meter and CT according to "6.6.2 Meter Connection". And the Meter should be connected to the main inverter's Meter port.**
2. Connect the generator according to "7.2.1 Generator Wiring". And the signal line for controlling the generator should be connected to the main inverter.
3. Please use twisted-pair network cable as the communication cable.
4. Turn on the DIP switches on the first and last inverters, and turn off those on the remaining inverters.
5. Make sure the E-Stop switch remains in the open state.
6. When multiple inverters are connected in parallel, the E-Stop switch should be connected to the main inverter.
7. Configure the parameters according to "6.6.3.2 Parallel Inverter Parameters Configuration".
8. Please connect to a reliable network to ensure the equipment is online.
9. When multiple inverters are connected in parallel, if one of them is energized, all other inverters connected in parallel with it may also be energized.
10. Each inverter should be of the same model, and ideally, the same number of batteries and the same number of photovoltaic panels should be configured.
11. (1) For 2 parallel inverters: Use the 600A meter and CT included in the accessory kit.
    (2) For 3+ parallel inverters: Use a user-supplied 3000A meter and CT.
    (3) Do not mix components or use third-party CTs. Meters and CTs must have matching current ratings.
12. When the number of paralleled inverters is 6–10 units, the wiring becomes more complex. For details, please consult CSA technicians.
13. Power on the inverters according to "8.2 Inverter Start-Up".

6.6.3.2 Parallel Inverter Parameters Configuration

Step 1: Log in to this website

1. Open the browser.
2. Enter this website "https://www.foxesscloud.com/v2/login".
3. Log in with your account and password.

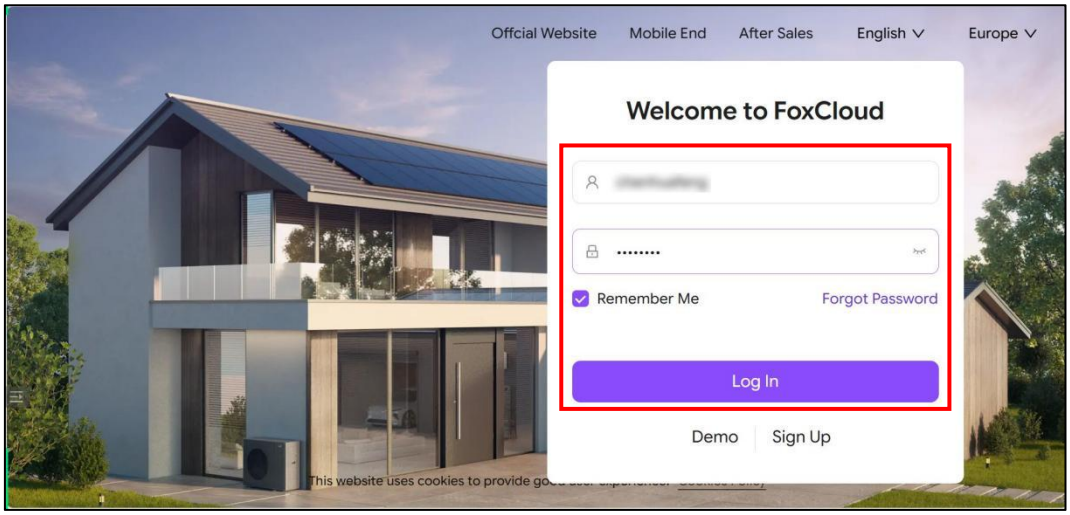

	Note! You can select preferred languages in the upper right corner.

Step 2: Enter the "Plants" Interface

1. Input the SN code of the inverter in the search box, and click " 🔍 " to find the inverter in need of operation.
2. Click the plant name.

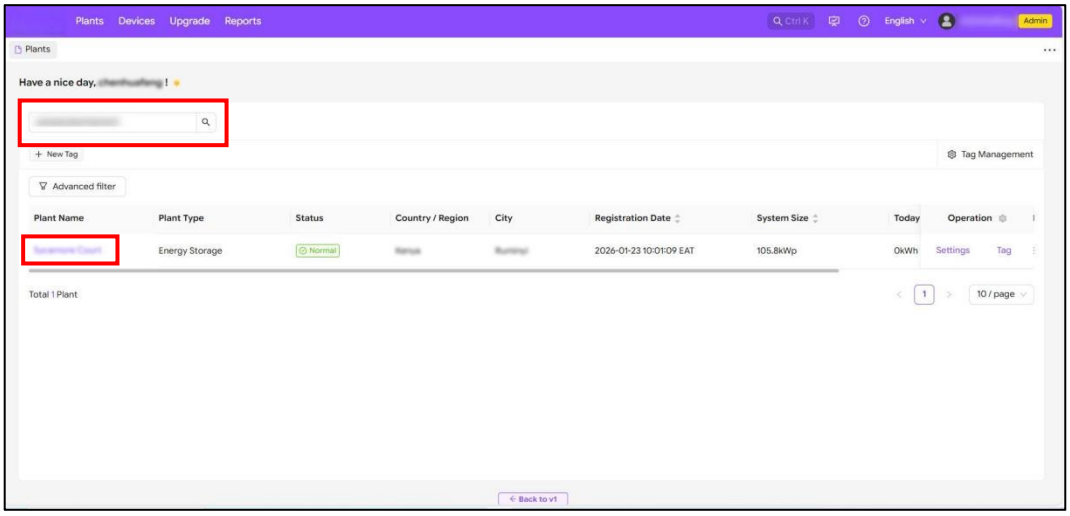

3. Click "Quick settings".

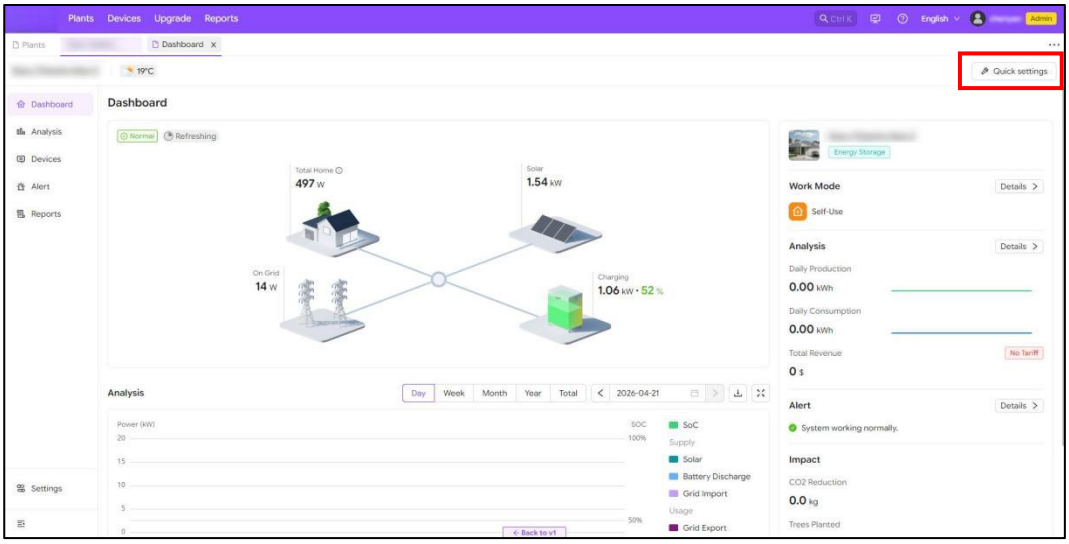

Step 3: Set the Parallel Parameters

1. Click"Advanced Settings"—"Parallel".
2. Set "Main-SubWorkingMode" to "enable".
3. Set "Main-SubSetting" to "Main" or "Sub".
4. Set "Main-SubNumber" according to the system configuration (e.g., if the system consists of 2 inverters, 1 main inverter and 1 sub inverter, set the "Leader-FollowerNumber" to "2").
5. Set "ParallelMode" according to needs. (The default mode is "Direct")
6. Click "Save".

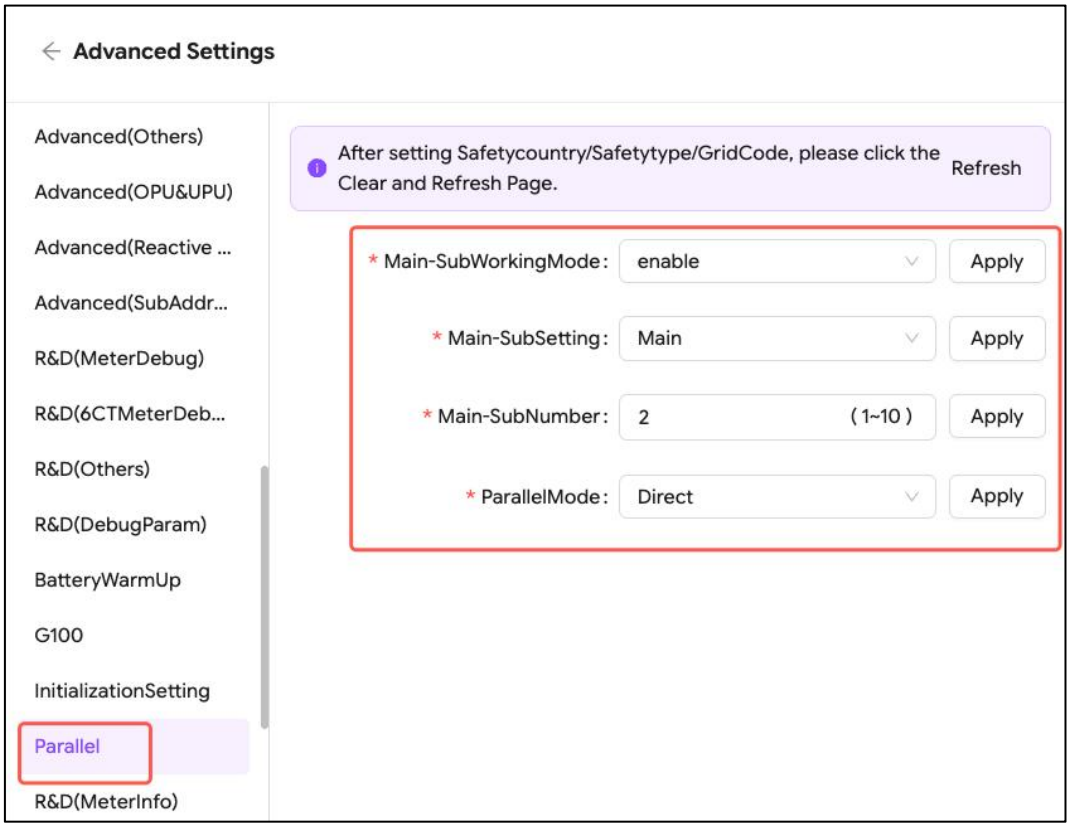

6.6.4 AC Couple

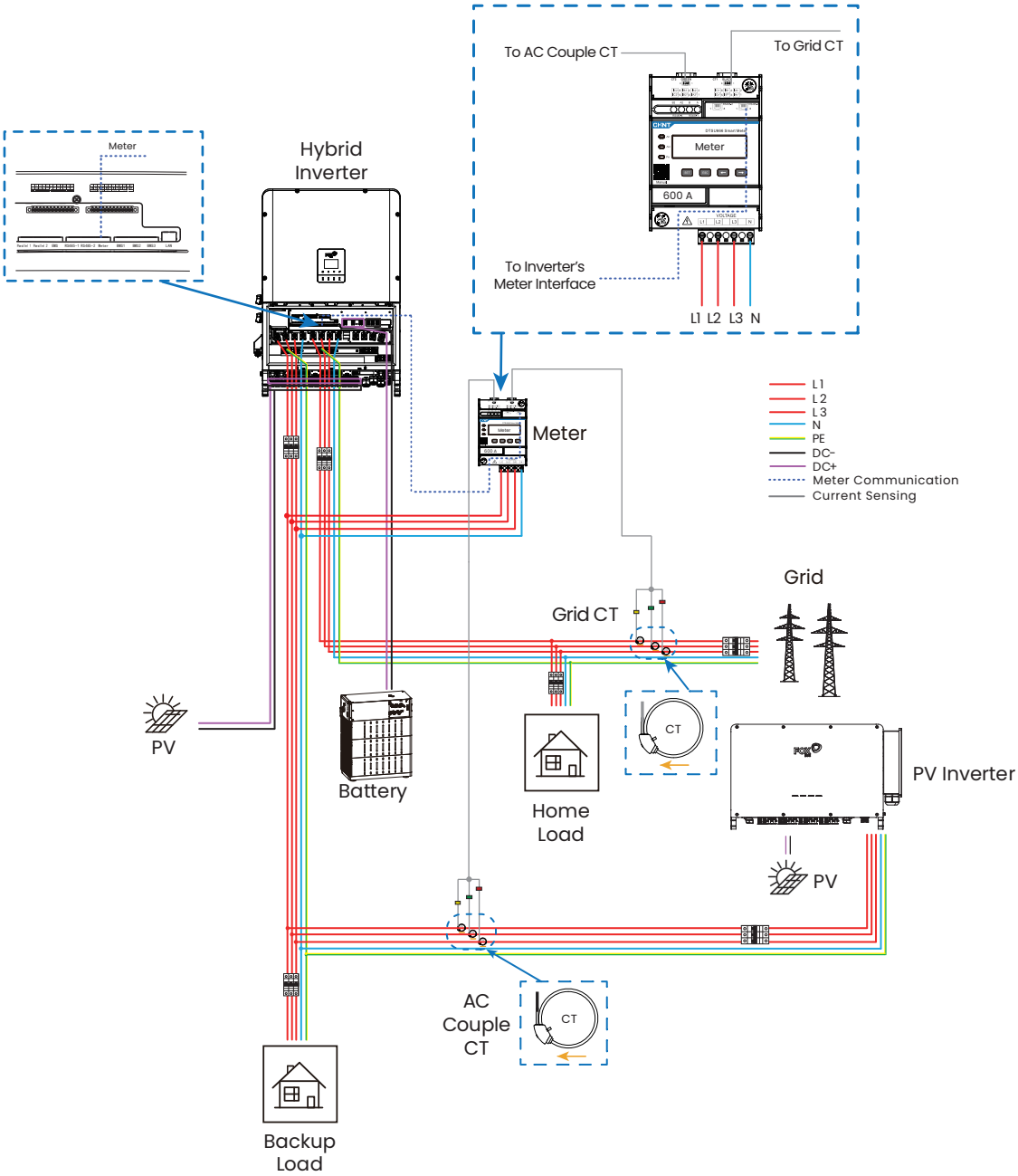

1. Connect the meter and CT according to “6.6.2 Meter Connection”.
2. Confirm all power and communication wiring is correctly installed and tightened.
3. Verify meter addresses and communication settings.
4. Power on the hybrid inverters according to “8.2 Inverter Start-Up”.
5. Power on the PV inverter according to its own user manual.

7. Main Function Implementation

7.1 Reactive Function Setting

Step 1: Log in to this website

1. Open the browser.
2. Enter this website "https://www.foxesscloud.com/v2/login".
3. Log in with your account and password.

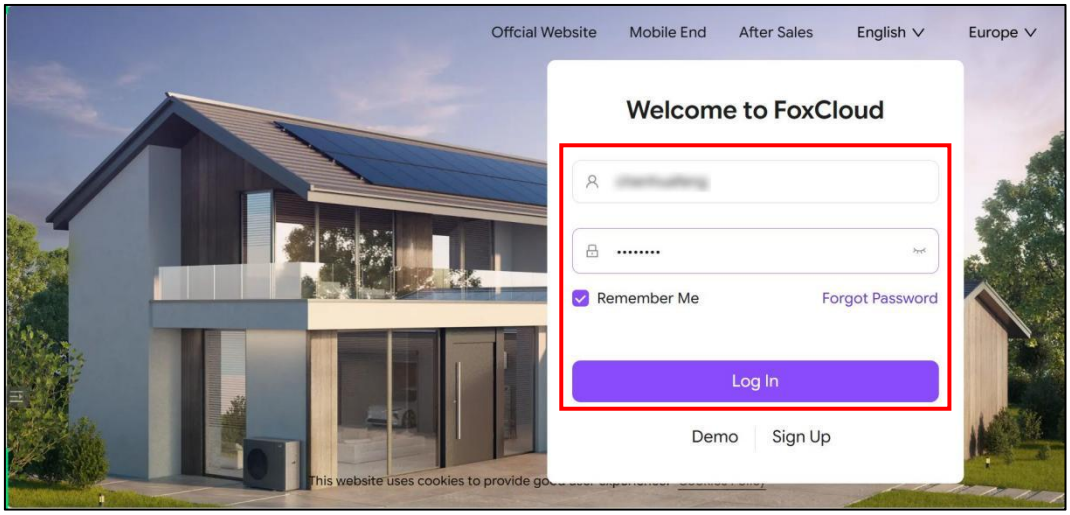

	Note! You can select preferred languages in the upper right corner.

Step 2: Enter the "Plants" Interface

1. Input the SN code of the inverter in the search box, and click " 🔍 " to find the inverter in need of operation.
2. Click the plant name.

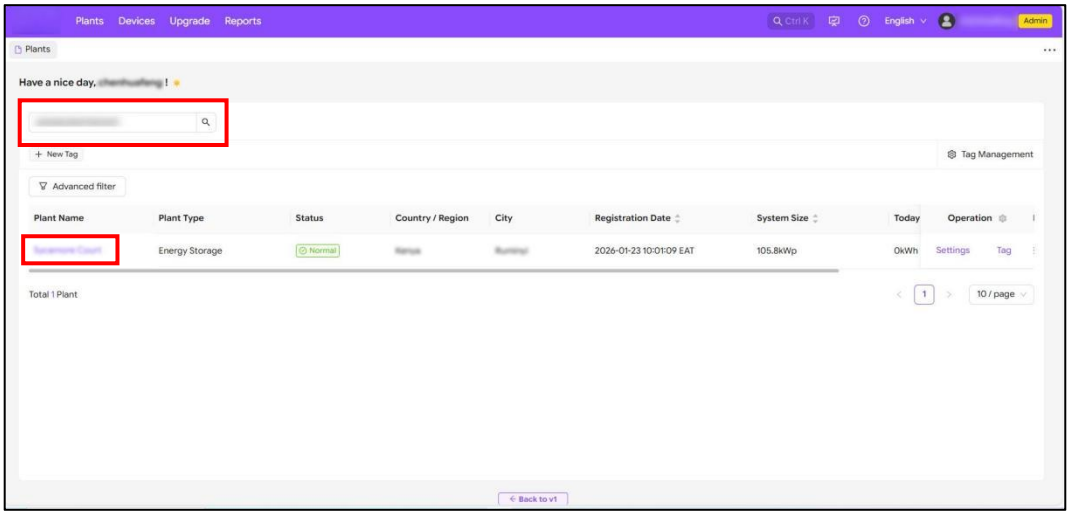

3. Click “Quick settings”.

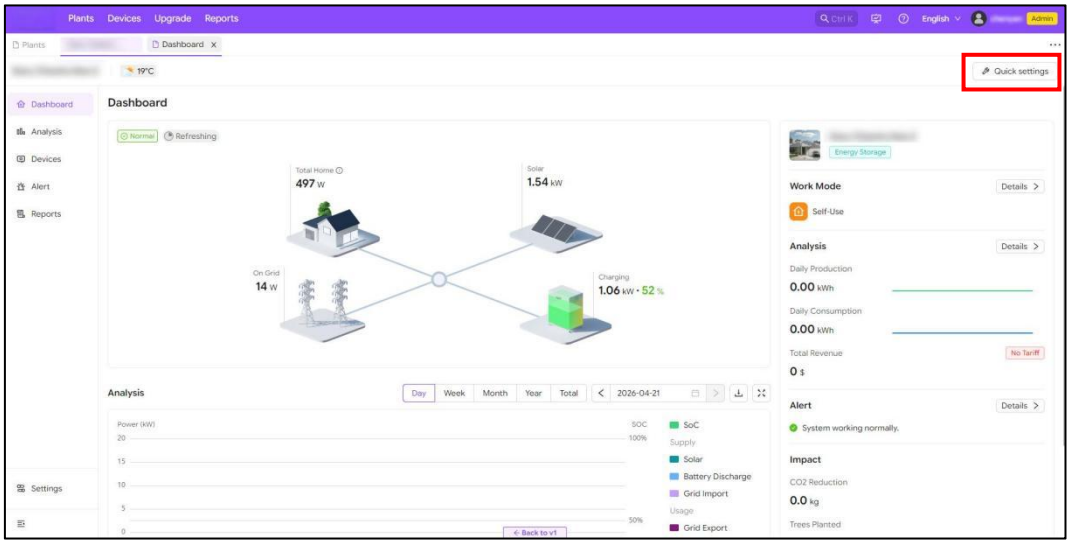

Step3: Set the Power Factor Parameters

1. Click”Advanced Settings”—“PowerFactor”.

2. Ensure “PowerFactorEnable(WInj)Enable” and “SetReactivePowerEnable”are enabled.

3. Click “Edit” and configure the “LimitMaximumActivePowerValue” as needed. The default value is 100, and the allowable range is from 0 to 2000.

4. Configure the “ReactivePowerSettingValue(KVars)” as needed. The default value is 0.0, and the allowable range is from -2000 to 2000.

5. Click “Save”.

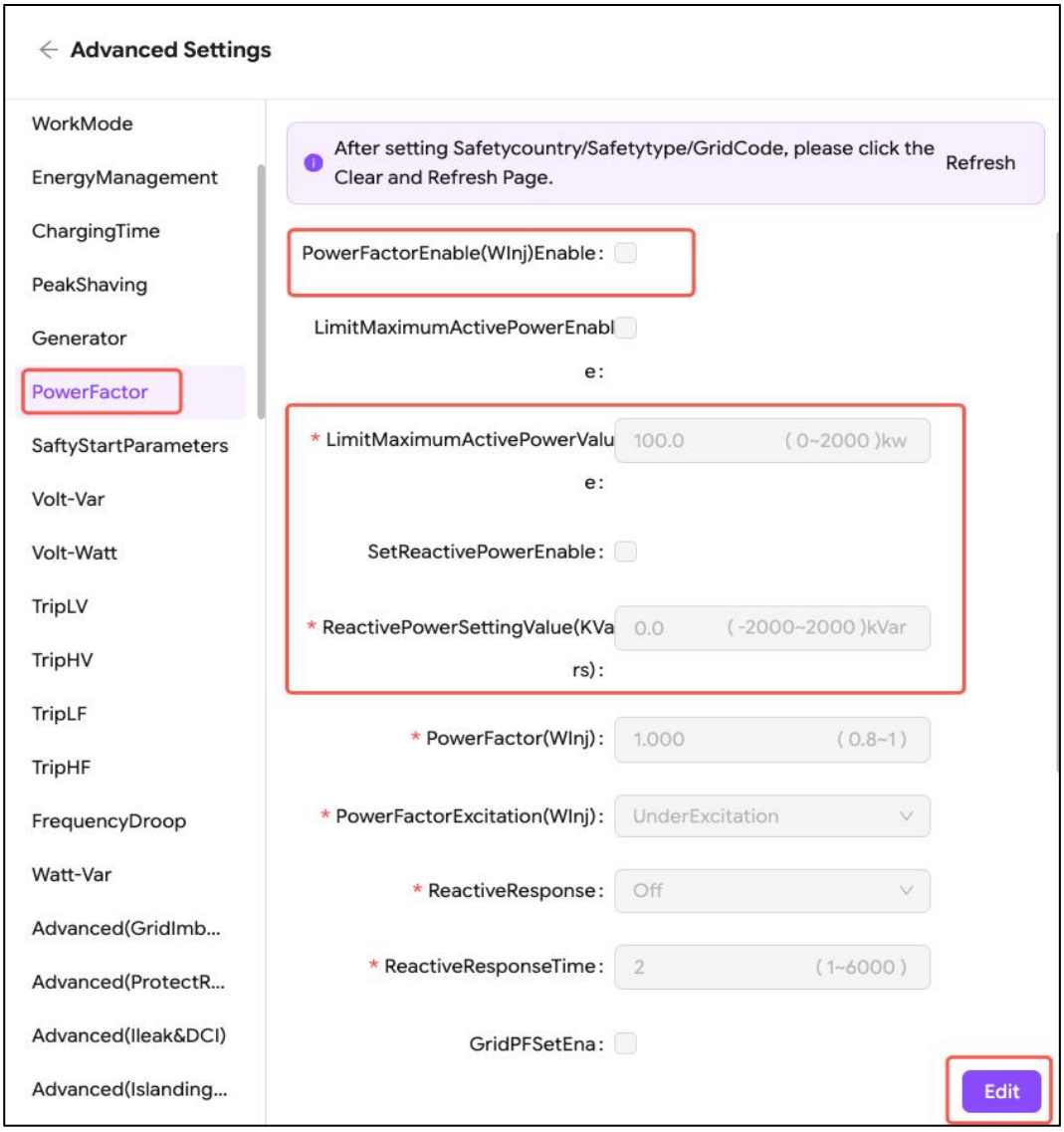
Advanced Settings
WorkMode
EnergyManagement
ChargingTime
PeakShaving
Generator
PowerFactor
SaftyStartParameters
Volt-Var
Volt-Watt
TripLV
TripHV
TripLF
TripHF
FrequencyDroop
Watt-Var
Advanced(GridImb...
Advanced(ProtectR...
Advanced(Ileak&DCI)
Advanced(Islanding...
After setting Safetycountry/Safetytype/GridCode, please click the Clear and Refresh Page.
Refresh
PowerFactorEnable(WInj)Enable:
LimitMaximumActivePowerEnable:
* LimitMaximumActivePowerValue:
100.0
(0~2000)kw
SetReactivePowerEnable:
* ReactivePowerSettingValue(KVars):
0.0
(-2000~2000)kVar
* PowerFactor(WInj):
1.000
(0.8~1)
* PowerFactorExcitation(WInj):
UnderExcitation
* ReactiveResponse:
Off
* ReactiveResponseTime:
2
(1~6000)
GridPFSetEna:
Edit

7.2 Diesel Generator

7.2.1 Generator Wiring

The following diagram illustrates the standard wiring method for integrating a diesel generator with the Inverter. This connection enables the Inverter to automatically start the generator when the grid is unavailable and the battery SOC is below the pre-set threshold.

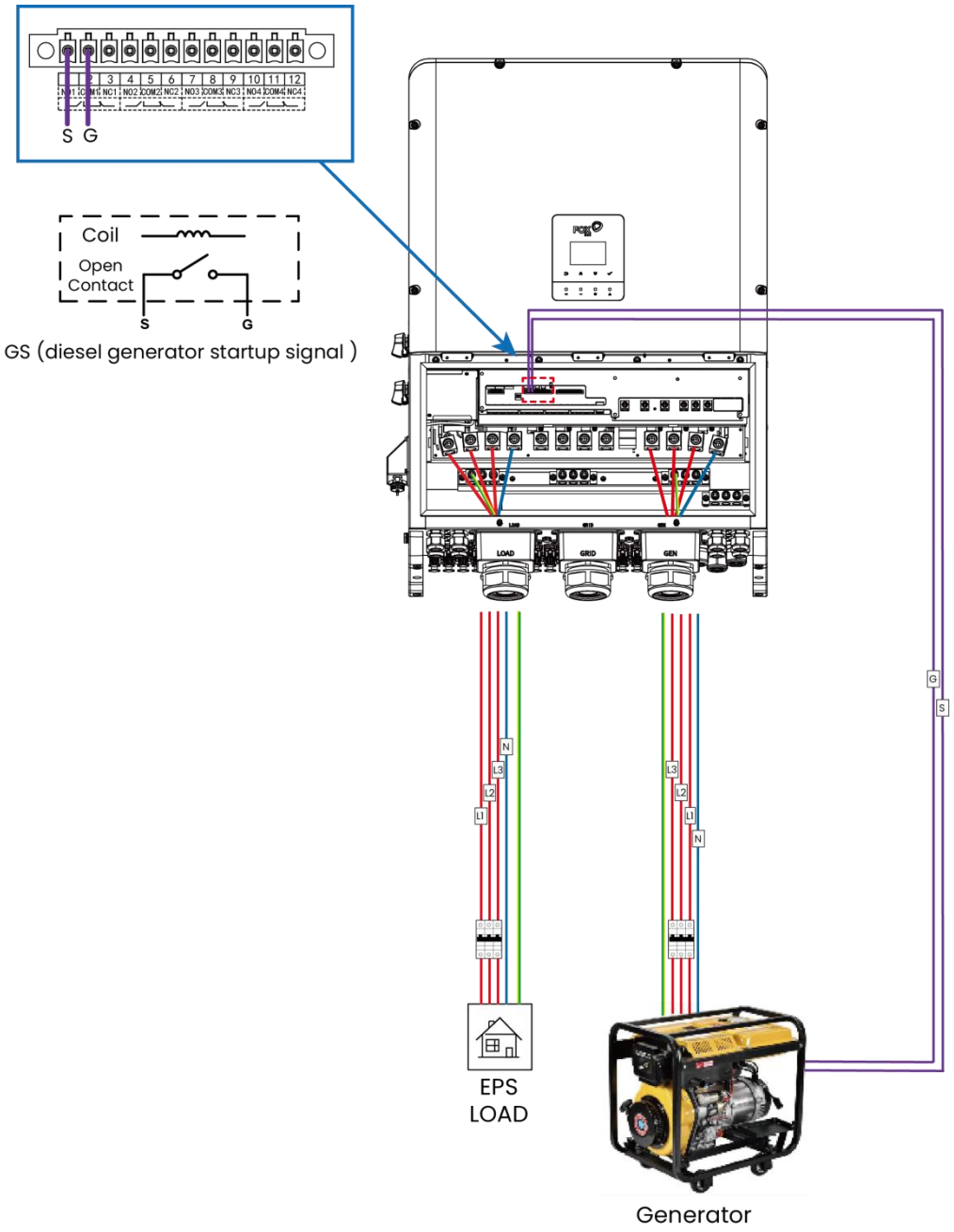

- Generator Start Signal Interface:
  - The Inverter provides a dry contact output interface located on the internal terminal block (e.g., port CN4, pin 1 and pin 2).
  - When conditions for generator startup are met, the inverter closes this contact to trigger the generator start command.
- Automatic Generator Control (AGS): The system supports AGS functionality, ensuring

the generator starts and stops automatically based on battery SOC, load demand, and grid availability.

- Load and Output Management: When the generator is active, the ESS can either bypass generator power directly to the load or charge the battery, depending on system configuration.

	Note! • Ensure the generator has proper grounding and meets local electrical standards. • Overcurrent protection and surge protection devices (SPDs) must be installed at the generator output side.

7.2.2 Parameters Configuration

Step 1: Log in to the this website

1. Open the browser.
2. Enter this website "https://www.foxesscloud.com/v2/login".
3. Log in with your account and password.

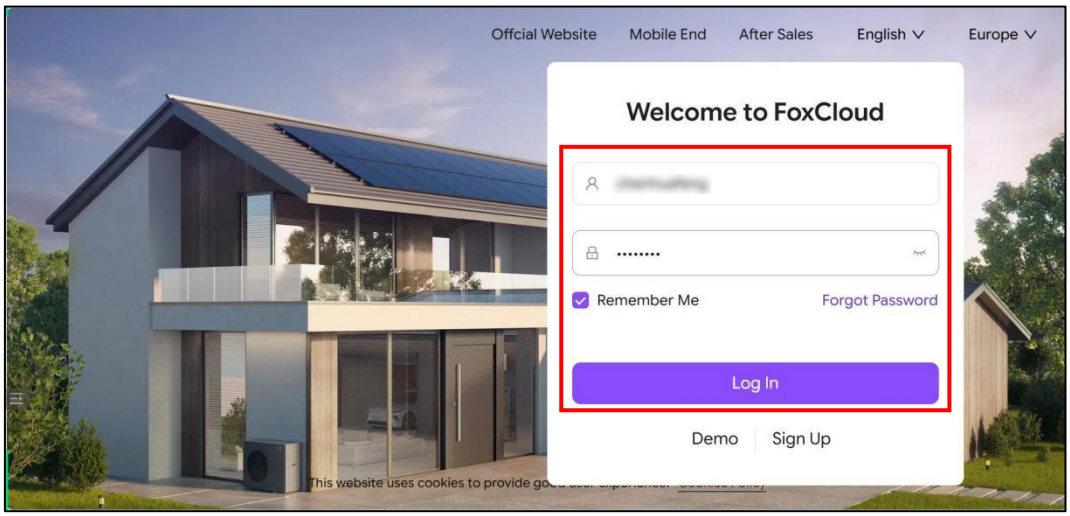

	Note! You can select preferred languages in the upper right corner.

Step 2: Enter the "Plants" Interface

1. Input the SN code of the inverter in the search box, and click " 🔍 " to find the inverter in need of operation.
2. Click the plant name.

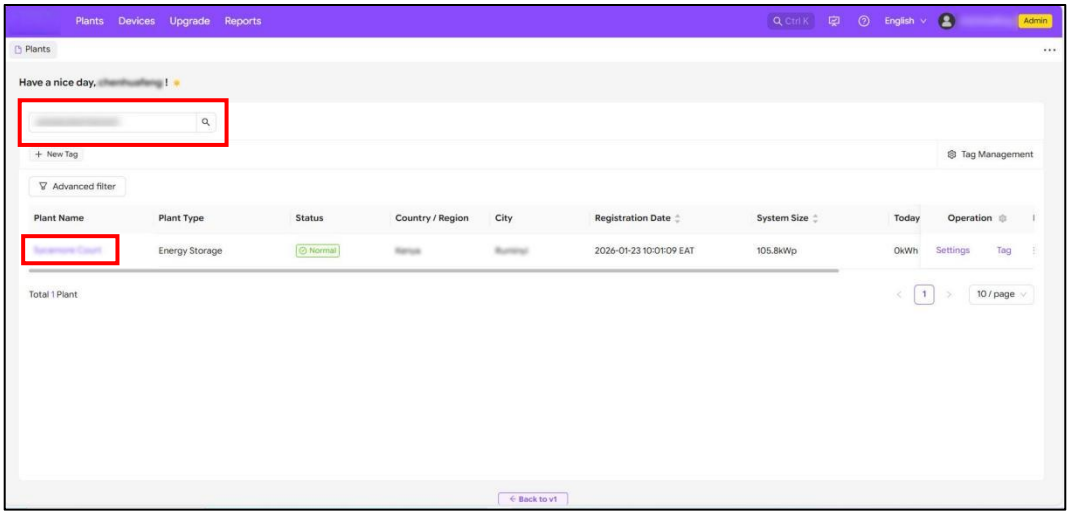

3. Click “Quick settings”.

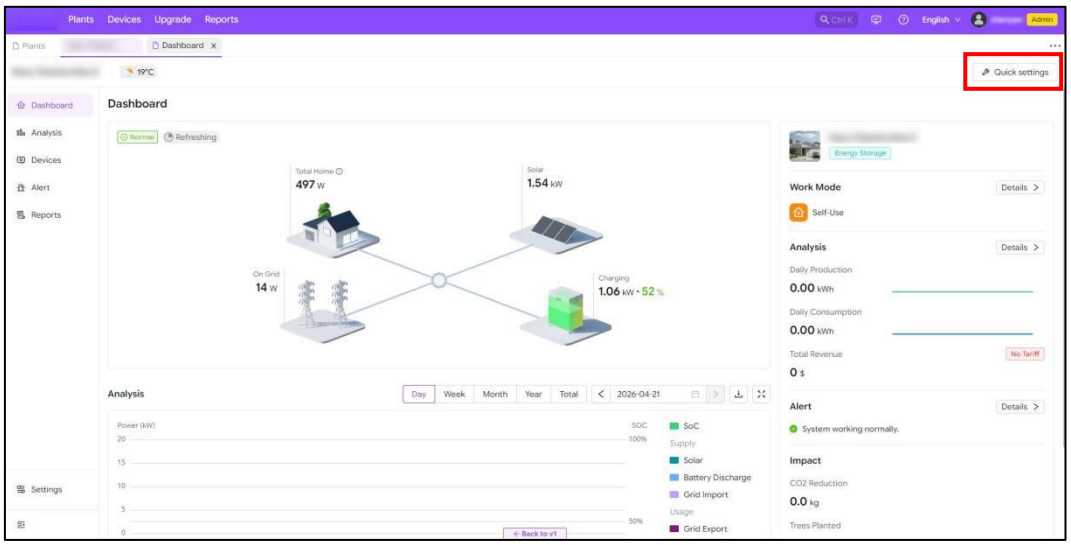

Step3: Set the Generator Parameters

1. Click Click”Advanced Settings”—“Generator”.

2. Click “Edit” and configure”GeneratorRatedPower” according to the power of the on-site generator.

3. Configure “MaxChargePower” as needed.(This value must not exceed the maximum power of the inverter.)

4. Configure “GenStartSoc” as needed. The default value is 30 and the allowable range is from 10 to 100. (The diesel generator will start automatically when the battery SOC falls below the lower limit.)

5. Configure “GenStopSoc” as needed. The default value is 95 and the allowable range is from 40 to 100. (The diesel generator will stop automatically when the battery SOC rises above the upper limit.)

6. Configure”BatChargeGenDuty” as needed. The default value is 50% which is the lower limit of the optimal operation power for the Generator.

7. Configure”BatDischargeGenDuty” as needed. The default value is 80% which is the upper limit of the optimal operation power for the Generator.

8. Click “Save”.

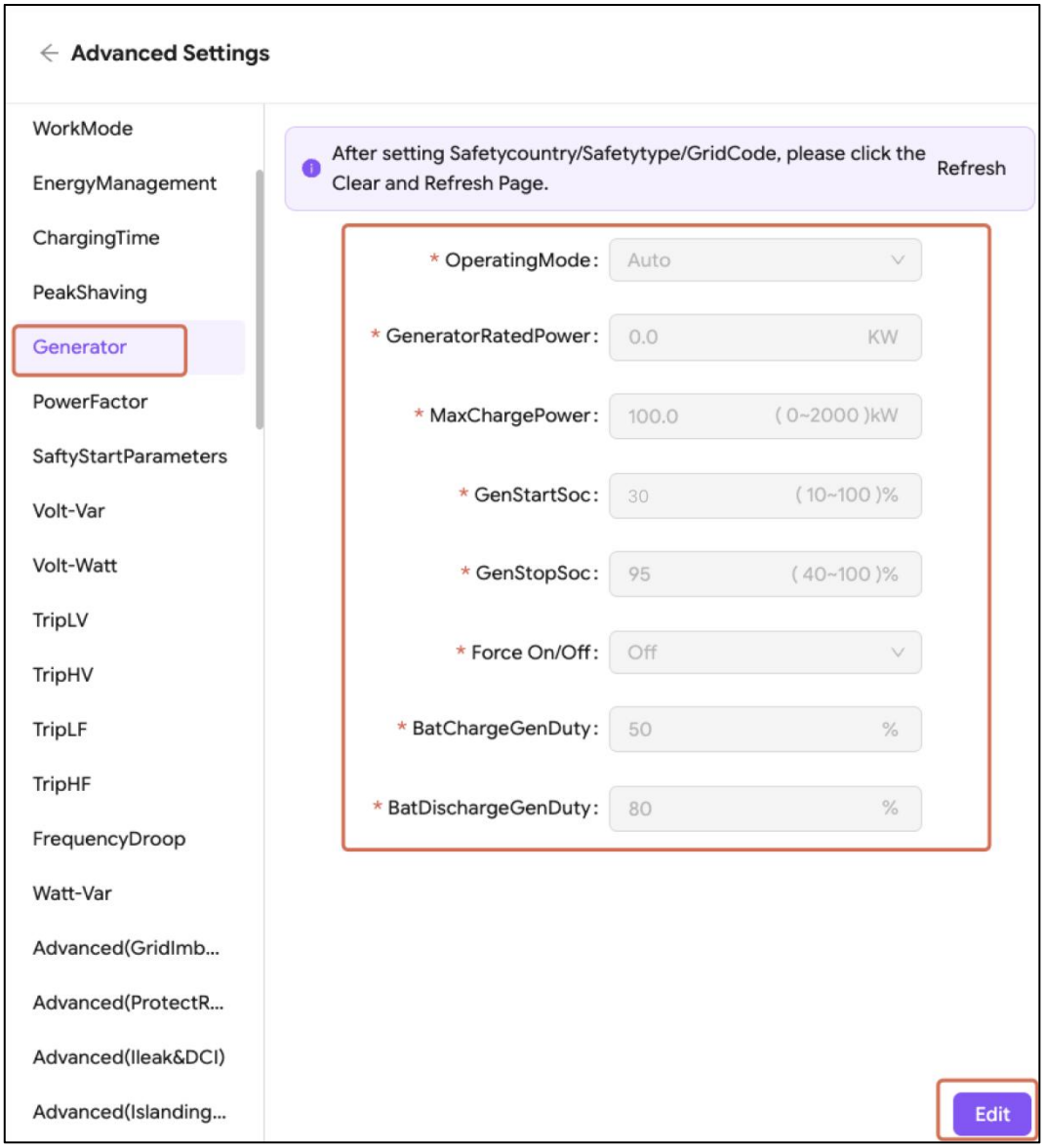
Advanced Settings
WorkMode
EnergyManagement
ChargingTime
PeakShaving
Generator
PowerFactor
SaftyStartParameters
Volt-Var
Volt-Watt
TripLV
TripHV
TripLF
TripHF
FrequencyDroop
Watt-Var
Advanced(GridImb...
Advanced(ProtectR...
Advanced(Ileak&DCI)
Advanced(Islanding...
After setting Safetycountry/Safetytype/GridCode, please click the Clear and Refresh Page.
Refresh
* OperatingMode: Auto
* GeneratorRatedPower: 0.0 KW
* MaxChargePower: 100.0 (0~2000)kW
* GenStartSoc: 30 (10~100)%
* GenStopSoc: 95 (40~100)%
* Force On/Off: Off
* BatChargeGenDuty: 50 %
* BatDischargeGenDuty: 80 %
Edit

8. Commissioning

8.1 Inspection before Commissioning

Check the following items before starting the inverter:

- All equipment has been reliably installed.
- DC switch(es) and AC circuit breaker are in the "OFF" position.
- The ground cable is properly and reliably connected.
- The AC cable is properly and reliably connected.
- The DC cable is properly and reliably connected.
- The communication cable is properly and reliably connected.
- The vacant terminals are sealed.
- No foreign items, such as tools, are left on the top of the machine or in the junction box(if there is).
- The AC circuit breaker is selected in accordance with the requirements of this manual and local standards.
- All warning signs & labels are intact and legible.

8.2 Inverter Start-Up

Please refer to the following steps to start up the inverter:

1. Ensure the inverter is securely mounted.
2. Confirm that all wiring has been properly completed.
3. Ensure the meter is correctly connected.
4. Ensure the batteries are properly connected.
5. Ensure the load breaker is connected properly (if applicable).
6. Ensure the batteries' Power buttons and switches are turned off.
7. Turn on the PV switch, AC grid breaker, load breaker, and battery breaker. Then, press and hold the batteries' Power buttons for 3 seconds, and release them.

⚠	**Warning!** Power to the unit must be turned on only after installation work has been completed. All electrical connections must be carried out by qualified personnel in accordance with legislation in force in the country of installation.

8.3 Inverter Switch Off

Please follow the below steps to switch off the inverter:

1. Switch off the inverter AC circuit breaker.
2. Turn the inverter DC switch to the "OFF" position.
3. Turn the battery switches to the "OFF" position.
4. Wait 15 min before you open the upper lid or the lower lid (if in need of repair).

9. Maintenance

This section contains information and procedures for solving possible problems with the CSA Solar inverters and provides you with troubleshooting tips to identify and solve most problems that can occur.

9.1 Maintenance Safety

⚠	**Danger!** • When maintaining the product, it is strictly prohibited to open the product if there is an odor or smoke or if the product appearance is abnormal. • Be sure to use special insulation tools when perform high-voltage operations. • Before maintenance, disconnect the AC circuit breaker on the grid side and then the DC switch. If a fault that may cause personal injury or device damage is found before maintenance, disconnect the AC circuit breaker and wait until the night before operating the DC switch. Otherwise, a fire inside the product or an explosion may occur, causing personal injuries. • After the inverter is powered off for 15 minutes, measure the voltage and current with professional instrument. Only when there is no voltage nor current can operators who wear protective equipment operate and maintain the inverter. • Even if the inverter is shut down, it may still be hot and cause burns. Wear protective gloves before operating the inverter after it cools down.
⚠	**Caution!** To prevent misuse or accidents caused by unrelated personnel: Post prominent warning signs or demarcate safety warning areas around the inverter to prevent accidents caused by misuse.
☞	**Note!** • Before handling the product, make sure that the tools you are using have been regularly maintained. • Restart the inverter only after removing the fault that impairs safety performance. • As the inverter contains no component parts that can be maintained, never open the enclosure, or replace any internal components. • To avoid the risk of electric shock, do not perform any other maintenance operations beyond this manual. If necessary, contact your distributor first. If the problem persists, contact CSASolar . Otherwise, the losses caused are not covered by the warranty. • Touching the PCB or other static sensitive components may cause damage to the device. Do not touch the circuit board unnecessarily. Observe the regulations to protect against electrostatic and wear an anti-static wrist strap.

9.2 Alarm List

Item	Fault Code	Statement	Solution
1	1030	AC Overcurrent	1. The inverter continuously monitors its external working conditions in real time, and it can automatically recover once the fault is rectified. 2. If the fault is triggered frequently and affects the power production of the PV plant, check for any short circuits in the grid or the output. If the fault persists,contact your installer.
2	1034	DC Component Current Fault	1. If the fault is triggered accidentally, it may be due to temporary abnormalities in the power grid. The inverter will automatically recover after the power grid has resumed normal operation. 2. Check whether the on-grid voltage is normal. 3. If the fault still exists, contact your installer.
3	1035	High Leakage Current Fault	1. If the fault is triggered accidentally, the external power cable may be abnormal temporarily. The inverter will automatically recover once the fault is rectified. 2. If the fault is triggered frequently or persists, check that the impedance between the PV string and ground is not below the lower threshold.
4	1036	Static Leakage Current Fault	
5	1040	Unbalanced Grid Voltage	1. Check that the grid voltage is within the normal range. 2. Check whether the neutral cable is connected correctly. 3. If the cable is connected properly but the fault is triggered frequently and affects the power production of the PV plant, contact the local power operator.
6	1042	Grid Frequency High	1. If the fault is triggered accidentally, it

Item	Fault Code	Statement	Solution
7	1043	Grid Frequency Low	may be due to temporary abnormalities in the power grid. The inverter will automatically recover after the power grid has resumed normal operation. 2. If the fault is triggered frequently, check whether the grid frequency is within the acceptable range. If it is not, contact the local power operator. If grid frequency is within the acceptable range, modify the grid overfrequency protection threshold with the consent from the local power operator.
8	1044	Grid Phase Voltage Over Limit	1.If the fault is occasionally triggered, it may be caused by temporary voltage anomalies in the power grid. The inverter will automatically resume operation once the grid returns to normal. 2.Check whether the grid-connected phase voltage exceeds the specified limit. If it is outside the standard range, contact the local power operator for grid adjustment measures. 3.If the grid-connected phase voltage has been confirmed to exceed the limit and approval has been obtained from the local power operator, you may manually adjust the over/undervoltage protection threshold parameters to adapt to actual grid conditions.
9	1045	Grid Line Voltage Over Limit	1.If the fault is occasionally triggered, it may be caused by temporary voltage anomalies in the power grid. The inverter will automatically resume operation once the grid returns to normal. 2.Check whether the grid-connected line voltage exceeds the specified

Item	Fault Code	Statement	Solution
			limit. If it is outside the standard range, contact the local power operator for grid adjustment measures. 3.If the grid-connected line voltage has been confirmed to exceed the limit and approval has been obtained from the local power operator, you may manually adjust the over/undervoltage protection threshold parameters to adapt to actual grid conditions.
10	1046	Unbalanced Inverter Current	1.If the fault is sporadically triggered, it may be caused by temporary grid voltage anomalies. The inverter will automatically resume operation once the grid returns to normal. Check if the grid-connected voltage is unbalanced. If it exceeds the standard range, contact the local power operator for grid adjustments. 2.If grid-connected voltage abnormalities have been confirmed: Wait for the grid to stabilize and return to normal. 3.If the grid voltage shows no anomalies: Power off all inverters, wait 5 minutes before restarting. 4.If the issue persists, contact your installer.
11	1048	High DC Component Voltage When Off-Grid	1. If the fault is triggered accidentally, it may be due to temporary radiation interference. The inverter will automatically recover after the interference disappear. 2. If the fault is triggered frequently, contact your installer.
12	1050	Inverter Hardware Overcurrent	1. Check whether the AC grid cables are connected correctly. 2. The inverter monitors its external

Item	Fault Code	Statement	Solution
			working conditions in real time. And it will automatically recover once the fault is rectified. 3. If the fault is triggered frequently and affects the power production of the PV plant, check whether the grid or the output is overloaded or short-circuited. If the fault persists, contact your installer.
13	1051	Grid Phase Drop Fault	1. Check the configuration if the "OFF-GRID Enable" is set. 2. Check whether the grid voltage and frequency are within the acceptable range, if they are both within the acceptable range, contact your installer.
14	1057	Bus Transient Overvoltage	1. If the fault is triggered accidentally, it may be due to temporary abnormalities in the power grid. The inverter will automatically recover once the power grid has resumed normal functioning. 2. Check the PV open voltage is higher than upper threshold of the specification. 3. If the fault still exists, contact your installer.
15	1070	Bus Differential High Fault	1.Turn off the AC output switch, DC input switch, and battery switch in order, and then turn on the battery switch, AC output switch, and DC input switch in sequence after 5 minutes. 2. If the fault still exists, contact your installer.
16	1071	Bus Hardware Overvoltage	1. Check whether all the PV cables are connected correctly. 2. Check the PV open voltage is higher than upper threshold of the specification. 3. Turn off the AC output switch, DC

Item	Fault Code	Statement	Solution
			input switch, and battery switch in order, and then turn on the battery switch, AC output switch, and DC input switch in sequence after 5 minutes. 4. If the fault still exists, contact your installer.
17	1084	Balancing Bridge Hardware Overcurrent	1. If the fault is triggered accidentally, it may be due to temporary radiation interference. The inverter will automatically recover once the interference disappears. 2. If the fault is triggered frequently, contact your installer.
18	1085	DC Input MPPT1 Access Fault	Check whether the PV cables are connected correctly. If they are, contact your installer.
19	1086	DC Input MPPT2 Access Fault	
20	1088	DC Input MPPT3 Access Fault	
21	1091	Off Grid Command Conflict	Check whether the configurations "OFF GRID Enable" and "Go OFF GRID" are coincident.
22	1092	INV Relay Fault	1. Check whether the neutral cables are connected correctly. 2. Check whether the configuration of "Country" is correct. 3. If the fault still exists, contact your installer.
23	1093	EPS Relay Fault	1. Check whether the neutral cables are connected correctly. 2. Check whether the configuration of "Country" is correct. 3. If the fault still exists, contact your installer.
24	1095	ESTOP Trigger	1. Check whether the Emergency Stop Switch is pushed. 2. Check whether the Emergency Stop Switch cable is open.

Item	Fault Code	Statement	Solution
			3. Check whether the Emergency Stop Switch cable is connected to the correct connector of the device. 4. Check whether the jumper in the inverter or the Hub is connected well. 5. If the fault still exists, contact your installer.
25	1099	Overtemperature Protection	1. Check the ventilation and ambient temperature at the inverter installation position. 2. If the ventilation is poor or the ambient temperature exceeds the upper threshold, improve the ventilation and heat dissipation. 3. Check whether the heatsink is covered with dust. If it is, clean the heatsink. 4. If the ventilation and ambient temperature both meet requirements, contact your installer.
26	1102	Inverter Current DC Component Offset Fault	1.Turn off the AC output switch, DC input switch, and battery switch in order, and then turn on the battery switch, AC output switch, and DC input switch in sequence after 2 minutes. 2. If the fault still exists, contact your installer.
27	1103	Inverter Current Offset Fault	
28	1106	Inverter Soft Start Timeout Fault	1. Check if the AC grid is normal. 2. If the fault still exists, contact your installer.
29	1107	BUS Soft Start Fault	1. Check whether all the PV cables and battery cables are connected correctly. 2. Check whether the output is overloaded or short-circuited. 3. Check the SOC of the battery and if the power of the loads exceeds the battery's power. 4. If the fault still exists, contact your

Item	Fault Code	Statement	Solution
			installer.
30	1108	Abnormal Frequency Detection Value	1. If the fault is triggered accidentally, it may be due to temporary abnormalities in the power grid. The inverter will automatically recover after the power grid has resumed normal operation. 2. If the fault is triggered frequently, check whether the grid voltage is within the acceptable range. If it is not, contact the local power operator. If grid voltage is within the acceptable range, contact your installer.
31	1109	Leak Current CT Self-checking Fault	1.Turn off the AC output switch, DC input switch, and battery switch in order, and then turn on the battery switch, AC output switch, and DC input switch in sequence after 2 minutes. 2. If the fault still exists, contact your installer.
32	1112	Internal Control Diagnosis Fault	1.Turn off the AC output switch, DC input switch, and battery switch in order, and then turn on the battery switch, AC output switch, and DC input switch in sequence after 2 minutes. 2. If the fault still exists, contact your installer.
33	1115	Balancing Bridge Current Sampling Channel Fault	1.Turn off the AC output switch, DC input switch, and battery switch in order, and then turn on the battery switch, AC output switch, and DC input switch in sequence after 2 minutes. 2. If the fault still exists, contact your installer.
34	1116	Ground Impedance Fault	1.Check if the grounding cable is properly connected. 2.Verify the insulation integrity between the ground wire and live wire. 3.If the issue persists, contact Maitian

Item	Fault Code	Statement	Solution
			Customer Service Center.
35	1123	Grid Relay Fault	1. Check whether the AC grid cables especially the neutral cables are connected correctly. 2. Check whether the configuration of "Country" is correct. 3. If the fault still exists, contact your installer.
36	1124	Low Insulation Impedance Fault	1. Check the impedance between the PV array output and PE, and eliminate short circuits and poor insulation points. 2. Check that the inverter PE cable is correctly connected. 3. If you are sure that the impedance is less than the default threshold value in a cloudy or rainy environment, contact your installer to reset the "Insulation Resistance Threshold Setting".
37	1125	Ground Relay Fault	1.Turn off the AC output switch, DC input switch, and battery switch in order, and then turn on the battery switch, AC output switch, and DC input switch in sequence after 2 minutes. 2. If the fault still exists, contact your installer.
38	1129	INV Open-Loop Self-Checking Fault	1. Check if the AC grid is normal. 2. If the fault still exists, contact your installer.
39	1132	INV Frequency Fault Under Off-Grid	1. If the fault is triggered accidentally, it may be due to temporary radiation interference. The CSA Inverter will automatically recover after the interference disappears. 2. If the fault is triggered frequently, contact your installer.
40	1136	Load Overpower Fault	1. Check if the power of the loads exceeds the rated value.

Item	Fault Code	Statement	Solution
			2. Check the SOC of the battery and verify if the power of the loads exceeds the battery's power. 3. If the fault still exists, contact your installer.
41	1137	INV Low Voltage Fault Under Off-Grid	1. Check if the power of the loads exceeds the rated value. 2. Check the SOC of the battery and verify if the power of the loads exceeds the battery's power. 3. If the fault still exists, contact your installer.
42	1138	Redundant Detection Fault of Grid Voltage for Auxiliary DSP	Check whether the AC grid voltage is normal.
43	1139	Redundant Detection Fault of Grid Frequency for Auxiliary DSP	Check whether the AC grid frequency is normal.
44	1141	Redundant Detection Fault of Leak Current for Auxiliary DSP	Check the impedance between the PV string and ground.
45	1145	Arc Fault	Check whether the string circuit arcs are in poor contact. After the fault is rectified, manually clear the fault and then start again.
46	1149	INV High Voltage Fault Under Off-Grid	1. If the fault is triggered accidentally, it may be due to temporary radiation interference. The inverter will automatically recover after the interference disappears. 2. If the fault is triggered frequently, contact your installer.
47	1154	INV Overcurrent Permanent Fault	1. Check whether the grid or the output is overloaded or short-circuited. 2. Turn off the AC output switch, DC input switch, and battery switch in order, and then turn on the battery switch, AC output switch, and DC input switch in sequence after 2 minutes.

Item	Fault Code	Statement	Solution
			3. If the fault still exists, contact your installer.
48	1157	Relay Permanent Fault	1. Check whether the AC grid cables especially the neutral cable are connected correctly. 2. Check whether the configuration of "Country" is correct. 3. Turn off the AC output switch, DC input switch, and battery switch in order, and then turn on the battery switch, AC output switch, and DC input switch in sequence after 2 minutes. 4. If the fault still exists, contact your installer.
49	1160	INV SelfCheck Permanent Fault	1. Turn off the DC input switch, and battery switch in order, and then turn on the battery switch and DC input switch in sequence after 2 minutes. 2. If the fault still exists, contact your installer.
50	1163	Balancing Bridge Overcurrent Permanent Fault	1. Turn off the AC output switch, DC input switch, and battery switch in order, and then turn on the battery switch, AC output switch, and DC input switch in sequence after 2 minutes. 2. If the fault still exists, contact your installer.
51	1173	Internal Control Diagnosis Permanent Fault	1. Turn off the DC input switch, and battery switch in order, and then turn on the battery switch and DC input switch in sequence after 2 minutes. 2. If the fault still exists, contact your installer.
52	1174	BUS Hardware Overvoltage Permanent Fault	1. Turn off the DC input switch, and battery switch in order, and then turn on the battery switch and DC input switch in sequence after 2 minutes. 2. If the fault still exists, contact your installer.

Item	Fault Code	Statement	Solution
53	1176	BST Hardware Overcurrent Permanent Fault	1. Turn off the DC input switch, and battery switch in order, and then turn on the battery switch and DC input switch in sequence after 2 minutes. 2. If the fault still exists, contact your installer.
54	1177	Static Leak Current Permanent Fault	1. Turn off the DC input switch, and battery switch in order, and then turn on the battery switch and DC input switch in sequence after 2 minutes. 2. If the fault still exists, contact your installer.
55	1178	BUS Overvoltage Permanent Fault	1. Turn off the DC input switch, and battery switch in order, and then turn on the battery switch and DC input switch in sequence after 2 minutes. 2. If the fault still exists, contact your installer.
56	1179	High BUS Voltage Imbalance Permanent Fault	1. Turn off the DC input switch, and battery switch in order, and then turn on the battery switch and DC input switch in sequence after 2 minutes. 2. If the fault still exists, contact your installer.
57	1181	Arc Permanent Fault	1. Check whether all the PV cables are connected correctly. 2. Turn off the AC output switch, DC input switch, and battery switch in order, and then turn on the battery switch, AC output switch, and DC input switch in sequence after 2 minutes. 3. If the fault still exists, contact your installer.
58	1182	BDC Overcurrent Permanent Fault	1. Check whether if the output is overloaded or short-circuited. 2. Shut down the battery and check that the communications cable and power cable between the inverter and the battery are properly connected. 3. Turn off the AC output switch, DC

Item	Fault Code	Statement	Solution
			input switch, and battery switch in order, and then turn on the battery switch, AC output switch, and DC input switch in sequence after 2 minutes. 4. If the fault still exists, contact your installer.
59	1185	Abnormal Grid Startup Voltage	1. Check whether the grid voltage and frequency are normal. 2. If the alarm is triggered accidentally, it may be due to temporary radiation interference. The inverter will automatically recover after the interference disappears. 2. If the alarm is triggered frequently, contact your installer.
60	1186	Off-Grid Running Alarm	1. Check whether the grid voltage and frequency are normal.
61	1188	AC Lightening Protector Anomaly	1. Turn off the AC output switch, DC input switch, and battery switch in order, and then turn on the battery switch, AC output switch, and DC input switch in sequence after 2 minutes. 2. If the alarm still exists, contact your installer.
62	1189	DC Lightening Protector Anomaly	1. Turn off the AC output switch, DC input switch, and battery switch in order, and then turn on the battery switch, AC output switch, and DC input switch in sequence after 2 minutes. 2. If the alarm still exists, contact your installer.
63	1190	Temperature Sensor Alarm	1. Turn off the AC output switch, DC input switch, and battery switch in order, and then turn on the battery switch, AC output switch, and DC input switch in sequence after 2 minutes. 2. If the alarm still exists, contact your installer.
64	1191	External Fan Alarm	1. Turn off the AC output switch, DC

Item	Fault Code	Statement	Solution
			input switch, and battery switch in order, and then turn on the battery switch, AC output switch, and DC input switch in sequence after 2 minutes. 2. If the alarm still exists, contact your installer.
65	1192	Internal Fan Alarm	1. Turn off the AC output switch, DC input switch, and battery switch in order, and then turn on the battery switch, AC output switch, and DC input switch in sequence after 2 minutes. 2. If the alarm still exists, contact your installer.
66	1193	EEPROM Write-Read Alarm	1. Turn off the AC output switch, DC input switch, and battery switch in order, and then turn on the battery switch, AC output switch, and DC input switch in sequence after 2 minutes. 2. If the alarm still exists, contact your installer.
67	1194	Slave to Master Communication Alarm	1. Turn off the AC output switch, DC input switch, and battery switch in order, and then turn on the battery switch, AC output switch, and DC input switch in sequence after 2 minutes. 2. If the alarm still exists, contact your installer.
68	1195	Grid Phase Change Alarm	1. Turn off the AC output switch, DC input switch, and battery switch in order, and then turn on the battery switch, AC output switch, and DC input switch in sequence after 2 minutes. 2. If the alarm still exists, contact your installer.
69	1220	BDC Over Current Fault	1. If the fault is triggered accidentally, it may be due to temporary radiation interference. The inverter will automatically recover once the interference disappears. 2. If the fault is triggered frequently,

Item	Fault Code	Statement	Solution
			restart the battery. 3. Turn off the AC output switch, DC input switch, and battery switch in order, and then turn on the battery switch, AC output switch, and DC input switch in sequence after 2 minutes. 4. If the fault still exists, contact your installer.
70	1223	BDC Hardware Overcurrent Fault	1. If the fault is triggered accidentally, it may be due to temporary radiation interference. The inverter will automatically recover once the interference disappears. 2. If it is triggered continually, contact your installer.
71	1224	BDC3 Current Sampling Channel Fault	1. Shut down the battery and check the communications cable and power cable between the inverter and the battery are properly connected. 2. Turn off the AC output switch, DC input switch, and battery switch in order, and then turn on the battery switch, AC output switch, and DC input switch in sequence after 2 minutes. 3. If the fault still exists, contact your installer.
72	1229	BDC Overtemperature Fault	1. Check the ventilation and ambient temperature at the inverter installation position. 2. If the ventilation is poor or the ambient temperature exceeds the upper threshold, improve the ventilation and heat dissipation. 3. Check the whether heatsink is covered with dust. if is it, clean the heatsink. 4. If the ventilation and ambient temperature both meet requirements, contact your installer.
73	1237	BDC1 Current Sampling	1. Shut down the battery and check the

Item	Fault Code	Statement	Solution
		Channel Fault	communications cable and power cable between the inverter and the battery are properly connected. 2. Turn off the AC output switch, DC input switch, and battery switch in order, and then turn on the battery switch, AC output switch, and DC input switch in sequence after 2 minutes. 3. If the fault still exists, contact your installer.
74	1238	BDC2 Current Sampling Channel Fault	1. Shut down the battery and check the communications cable and power cable between the inverter and the battery are properly connected. 2. Turn off the AC output switch, DC input switch, and battery switch in order, and then turn on the battery switch, AC output switch, and DC input switch in sequence after 2 minutes. 3. If the fault still exists, contact your installer.
75	1241	BDC Soft Start Fault	1. Shut down the battery and check the communications cable and power cable between the inverter and the battery are properly connected. 2. Turn off the AC output switch, DC input switch, and battery switch in order, and then turn on the battery switch, AC output switch, and DC input switch in sequence after 2 minutes. 3. If the fault still exists, contact your installer.
76	1243	BDC transient Overvoltage Fault	1. Shut down the battery and check the communications cable and power cable between the inverter and the battery are properly connected. 2. Turn off the AC output switch, DC input switch, and battery switch in order, and then turn on the battery switch, AC output switch, and DC input

Item	Fault Code	Statement	Solution
			switch in sequence after 2 minutes. 3. If the fault still exists, contact your installer.
77	1244	BDC Average Overvoltage Fault	1. Shut down the battery and check the communications cable and power cable between the inverter and the battery are properly connected. 2. Turn off the AC output switch, DC input switch, and battery switch in order, and then turn on the battery switch, AC output switch, and DC input switch in sequence after 2 minutes. 3. If the fault still exists, contact your installer.
78	1249	External Communication Error	1. Check whether the communications cables between the inverter and the battery are properly connected. 2. Check whether the length of the communication cable exceeds the upper threshold in the specification，and whether it is shielded twisted pair with drain wire. 3. Restart the battery. 4. If the fault still exists, contact your installer.
79	1250	Internal Communication Error	1. Restart the battery. 2. If the fault still exists, contact your installer.
80	1251	Overvoltage Protection	1. Restart the battery. 2. If the fault still exists, contact your installer.
81	1252	Undervoltage Protection	1. Restart the battery. 2. If the fault still exists, contact your installer.
82	1253	Charging Overcurrent Protection	1. Restart the battery. 2. If the fault still exists, contact your installer.
83	1254	Discharging Overcurrent Protection	1. Restart the battery. 2. If the fault still exists, contact your

Item	Fault Code	Statement	Solution
			installer.
84	1255	Cell Overtemperature Protection	1. Check the ventilation and ambient temperature at the battery installation position. 2. If the ventilation is poor or the ambient temperature exceeds the upper threshold, improve the ventilation and heat dissipation. 3. If the ventilation and ambient temperature both meet requirements, contact your installer.
85	1256	Cell Undertemperature Protection	1. Check whether the ambient temperature at the battery installation position is higher than the lower threshold. 2. If the fault still exists, restart the battery. 3. If the fault still exists, contact your installer.
86	1257	BMS Cell Imbalance	1. Restart the battery. 2. If the fault still exists, contact your installer.
87	1258	Hardware Protection	1. Restart the battery. 2. If the fault still exists, contact your installer.
88	1259	Circuit Fault	1. Restart the battery. 2. If the fault still exists, contact your installer.
89	1261	Voltage Sensor Fault	1. Restart the battery. 2. If the fault still exists, contact your installer.
90	1262	Temperature Sensor Fault	1. Restart the battery. 2. If the fault still exists, contact your installer.
91	1263	Current Sensor Fault	1. Restart the battery. 2. If the fault still exists, contact your installer.

Item	Fault Code	Statement	Solution
92	1264	Relay Fault	1. Restart the battery. 2. If the fault still exists, contact your installer.
93	1281	Communication Fault between Communication Board and Main DSP	1. Turn off the AC output switch, DC input switch, and battery switch in order, and then turn on the battery switch, AC output switch, and DC input switch in sequence after 2 minutes. 2. If the fault still exists, contact your installer.
94	1282	Communication Fault between Communication Board and Auxiliary DSP	
95	1283	Communication Fault between Communication Board and BMS	Shut down the battery and check the communication cables and power cable between the inverter and the battery are properly connected.
96	1284	Communication Fault between Communication Board and Built-In Meter	1. Turn off the AC output switch, DC input switch, and battery switch in order, and then turn on the battery switch, AC output switch, and DC input switch in sequence after 2 minutes. 2. If the fault still exists, contact your installer.
97	1285	Communication Fault between Communication Board and Grid Meter	Check whether the communication cables between the inverter and the Grid Meter are properly connected.
98	1286	Communication Board Flash Writing Fault	1. Turn off the AC output switch, DC input switch, and battery switch in order, and then turn on the battery switch, AC output switch, and DC input switch in sequence after 2 minutes. 2. If the fault still exists, contact your installer.
99	1287	RTC Read-Write Fault	
100	1288	Communication Fault between Communication Board and HUB Board	1. Check whether the communication cable between inverter and Hub，also between inverters, are connected correctly. 2. Check whether the length of the communication cable exceeds the upper threshold in the specification，and whether it is shielded twisted pair

Item	Fault Code	Statement	Solution
			with drain wire. 3. Turn off the AC output switch, DC input switch, and battery switch in order, and then turn on the battery switch, AC output switch, and DC input switch in sequence after 2 minutes. 4. If the fault still exists, contact your installer.
101	1289	Solar Meter Communication Fault	Check the communication cables of the Solar Meter are properly connected.
102	1290	GEN Meter Communication Fault	Check whether the communication cables of the GEN Meter are properly connected.
103	1291	Communication Fault between the Master and Slave	Check whether the communication cables of the main inverter to sub inverter are properly connected.
104	1292	Meter's CT Line Fault	Check whether the CT cables of the Meter are properly connected.
105	1293	Meter's Voltage Line Fault	Check whether the voltage cables of the Meter are properly connected.
106	1294	AFCI Fault Lock Device	You need to manually clear the fault or wait 24 hours
107	1295	Communication Fault between Communication Board and BMS	Shut down the battery and check the communication cables and power cable between the inverter and the battery are properly connected.
108	1296	Communication Fault between Communication Board and BMS	Shut down the battery and check the communication cables and power cable between the inverter and the battery are properly connected.
109	1313	Mppt1 High Voltage Fault	1. Check whether all the PV cables are connected correctly. 2. Check whether the PV open voltage is higher than upper threshold of the specification. 3. Turn off the AC output switch, DC input switch, and battery switch in
110	1314	Mppt2 High Voltage Fault	
111	1315	Mppt3 High Voltage Fault	
112	1316	Mppt4 High Voltage Fault	

Item	Fault Code	Statement	Solution
113	1317	Mppt5 High Voltage Fault	order, and then turn on the battery switch, AC output switch, and DC input switch in sequence after 5 minutes. 6. If the fault still exists, contact your installer.
114	1318	Mppt6 High Voltage Fault	
115	1319	Mppt7 High Voltage Fault	
116	1320	Mppt8 High Voltage Fault	
117	1321	Mppt9 High Voltage Fault	
118	1322	Mppt10 High Voltage Fault	
119	1323	Mppt11 High Voltage Fault	
120	1324	Mppt12 High Voltage Fault	
121	1325	DC Input MPPT4 Access Fault	Check whether the PV cables are connected correctly. If they are, contact your installer.
122	1326	DC Input MPPT5 Access Fault	
123	1327	DC Input MPPT6 Access Fault	
124	1328	DC Input MPPT7 Access Fault	
125	1329	DC Input MPPT8 Access Fault	
126	1330	DC Input MPPT9 Access Fault	
127	1331	DC Input MPPT10 Access Fault	
128	1332	DC Input MPPT11 Access Fault	
129	1333	DC Input MPPT12 Access Fault	
130	1345	String1 Access Fault	1. Check whether PV cables are connected correctly. 2. Turn off the AC output switch, DC input switch, and battery switch in order, and then turn on the battery
131	1346	String2 Access Fault	
132	1347	String3 Access Fault	

Item	Fault Code	Statement	Solution
133	1348	String4 Access Fault	switch, AC output switch, and DC input switch in sequence after 5 minutes. 3. If the fault still exists, contact your installer.
134	1349	String5 Access Fault	
135	1350	String6 Access Fault	
136	1351	String7 Access Fault	
137	1352	String8 Access Fault	
138	1353	String9 Access Fault	
139	1354	String10 Access Fault	
140	1355	String11 Access Fault	
141	1356	String12 Access Fault	
142	1357	String13 Access Fault	
143	1358	String14 Access Fault	
144	1359	String15 Access Fault	
145	1360	String16 Access Fault	
146	1361	String17 Access Fault	
147	1362	String18 Access Fault	
148	1363	String19 Access Fault	
149	1364	String20 Access Fault	
150	1365	String21 Access Fault	
151	1366	String22 Access Fault	
152	1367	String23 Access Fault	
153	1368	String24 Access Fault	
154	1409	HUB Grid Overvoltage	1. If the fault is triggered accidentally, it may be due to temporary abnormalities in the power grid. The

Item	Fault Code	Statement	Solution
			inverter will automatically recover once the power grid has resumed normal operation. 2. Check whether the on-grid voltage exceeds the upper threshold. If it is, contact the local power operator. 3. If you have confirmed that the grid connection voltage exceeds the upper threshold and have obtained the consent from the local power operator, modify the overvoltage protection threshold.
155	1410	HUB Grid Undervoltage	1. If the fault is triggered accidentally, it may be due to temporary abnormalities in the power grid. The inverter will automatically recover once the power grid has resumed normal operation. 2. If the fault is triggered frequently, check whether the grid voltage is within the acceptable range. If it is not, contact the local power operator. If grid voltage is within the acceptable range, modify the power grid undervoltage protection threshold with the consent from the local power operator. 3. If the fault persists for a long time, check the connection between the AC switch and the output power cable.
156	1411	HUB Grid Voltage Overfrequency	1. If the fault is triggered accidentally, it may be due to temporary abnormalities in the power grid. The inverter will automatically recover once the power grid has resumed normal operation. 2. If the fault is triggered frequently, check whether the grid frequency is within the acceptable range. If it is not, contact the local power operator. If grid frequency is within the

Item	Fault Code	Statement	Solution
			acceptable range, modify the grid overfrequency protection threshold with the consent from the local power operator.
157	1412	HUB Grid Voltage Underfrequency	1. If the fault is triggered accidentally, it may be due to temporary abnormalities in the power grid. The inverter will automatically recover once the power grid has resumed normal operation. 2. If the fault is triggered frequently, check whether the grid frequency is within the acceptable range. If it is not, contact the local power operator. If grid frequency is within the acceptable range, modify the grid overfrequency protection threshold with the consent from the local power operator.
158	1413	HUB Generator Overvoltage	1. If the fault is triggered accidentally, it may be due to temporary abnormalities in the Generator. The inverter will automatically recover after the power Generator has resumed normal operation. 2. Check whether the Generator voltage is normal. 3. If the fault still exists, contact your installer.
159	1414	HUB Generator Undervoltage	1. If the fault is triggered accidentally, it may be due to temporary abnormalities in the Generator. The inverter will automatically recover after the power Generator has resumed normal operation. 2. Check the connections between the Generator and the Hub. 3. Check whether the Generator voltage is normal. 4. If the fault still exists, contact your

Item	Fault Code	Statement	Solution
			installer.
160	1415	HUB Generator Voltage Overfrequency	1. If the fault is triggered accidentally, it may be due to temporary abnormalities in the Generator. The inverter will automatically recover after the power Generator has resumed normal operation. 2. If the fault is triggered frequently, check whether the Generator frequency is within the acceptable range. 3. If the fault still exists, contact your installer.
161	1416	HUB Generator Voltage Underfrequency	1. If the fault is triggered accidentally, it may be due to temporary abnormalities in the Generator. The inverter will automatically recover after the Generator has resumed normal operation. 2. If the fault is triggered frequently, check whether the Generator frequency is within the acceptable range. 3. If the fault still exists, contact your installer.
162	1417	HUB Load Overvoltage	1. If the fault is triggered accidentally, it may be due to temporary radiation interference. The inverter will automatically recover once the interference disappears. 2. Turn off the AC output switch, DC input switch, and battery switch in order, and then turn on the battery switch, AC output switch, and DC input switch in sequence after 2 minutes. 3. If the fault still exists, contact your installer.
163	1418	HUB Load Undervoltage	1. If the fault is triggered accidentally, it may be due to temporary radiation interference. The inverter will

Item	Fault Code	Statement	Solution
			automatically recover once the interference disappears. 2. Turn off the AC output switch, DC input switch, and battery switch in order, and then turn on the battery switch, AC output switch, and DC input switch in sequence after 2 minutes. 3. If the fault still exists, contact your installer.
164	1419	HUB Load Voltage Overfrequency	1. If the fault is triggered accidentally, it may be due to temporary radiation interference. The inverter will automatically recover once the interference disappears. 2. Turn off the AC output switch, DC input switch, and battery switch in order, and then turn on the battery switch, AC output switch, and DC input switch in sequence after 2 minutes. 3. If the fault still exists, contact your installer.
165	1420	HUB Load Voltage Underfrequency	1. If the fault is triggered accidentally, it may be due to temporary radiation interference. The inverter will automatically recover once the interference disappears. 2. Turn off the AC output switch, DC input switch, and battery switch in order, and then turn on the battery switch, AC output switch, and DC input switch in sequence after 2 minutes. 3. If the fault still exists, contact your installer.
166	1421	HUB Grid Relay Short Circuit Fault	1. Turn off the AC output switch, DC input switch, and battery switch in order, turn off and then turn on the Manual switch on the Grid Relay. Then turn on the battery switch, AC output switch, and DC input switch in sequence after 2 minutes.

Item	Fault Code	Statement	Solution
			2. If the fault still exists, contact your installer.
167	1422	HUB Grid Relay Open Circuit Fault	1. Turn off the AC output switch, DC input switch, and battery switch in order, turn on and then turn off the Manual switch on the Grid Relay. Then turn on the battery switch, AC output switch, and DC input switch in sequence after 2 minutes. 2. If the fault still exists, contact your installer.
168	1423	HUB Generator Relay Short Circuit Fault	1. Turn off the AC output switch, DC input switch, and battery switch in order, turn off and then turn on the Manual switch on the Generator Relay. Then turn on the battery switch, AC output switch, and DC input switch in sequence after 2 minutes. 2. If the fault still exists, contact your installer.
169	1424	HUB Generator Relay Open Circuit Fault	1. Turn off the AC output switch, DC input switch, and battery switch in order, turn on and then turn off the Manual switch on the Generator Relay. Then turn on the battery switch, AC output switch, and DC input switch in sequence after 2 minutes. 2. If the fault still exists, contact your installer.
170	1425	HUB Load Voltage Anomaly Fault	Check whether all the Loads Connections of the Hub are correct.
171	1426	HUB and Inverter Communication Fault	1.Verify if the configuration of inverter numbers matches the actual number of inverters installed. 2. Check whether the communication cables between inverter and Hub，also between inverters, are connected correctly. 3. Check whether the length of the

Item	Fault Code	Statement	Solution
			communication cable exceeds the upper threshold in the specification，and whether it is shielded twisted pair with drain wire. 4. If steps 1 and 2 are both checked,turn off the AC output switch, DC input switch, and battery switch in order, and then turn on the battery switch, AC output switch, and DC input switch in sequence after 2 minutes. If the fault still exists, contact your installer.
172	1427	HUB Overload Fault	Check if the total home loads exceed the specification.
173	1428	Inconsistent Settings of Paralleled Inverters in HUB Mode	Check if all the inverter's configurations are the same, such as "Country".
174	1429	HUB Overtemperature	1. Check the ventilation and ambient temperature at the Hub installation position. 2. If the ventilation is poor or the ambient temperature exceeds the upper threshold, improve the ventilation and heat dissipation. 3. Check whether the heatsink is covered with dust. If it is, clean the heatsink. 4. If the ventilation and ambient temperature both meet requirements, contact your installer.
175	1430	Inconsistent Number of 485 and CAN Communications	1. Check whether the communication cables between inverter and Hub，also between inverters, are connected correctly. 2. Check whether the length of the communication cable exceeds the upper threshold in the specification，and whether it is shielded twisted pair with drain wire. 3. If steps 1 and 2 are both

Item	Fault Code	Statement	Solution
			checked,turn off the AC output switch, DC input switch, and battery switch in order, and then turn on the battery switch, AC output switch, and DC input switch in sequence after 2 minutes. If the fault still exists, contact your installer.
176	1441	BDC1 Average Low Voltage Fault (Total battery voltage is below undervoltage value in non-charging mode)	1. Shut down the battery and check the communications cable and power cable between the inverter and the battery are properly connected. 2. Turn off the AC output switch, DC input switch, and battery switch in order, and then turn on the battery switch, AC output switch, and DC input switch in sequence after 2 minutes. 3. If the fault still exists, contact your installer.
177	1442	BDC2 Average Low Voltage Fault (Total battery voltage is below undervoltage value in non-charging mode)	1. Shut down the battery and check the communications cable and power cable between the inverter and the battery are properly connected. 2. Turn off the AC output switch, DC input switch, and battery switch in order, and then turn on the battery switch, AC output switch, and DC input switch in sequence after 2 minutes. 3. If the fault still exists, contact your installer.
178	1443	BDC3 Average Low Voltage Fault (Total battery voltage is below undervoltage value in non-charging mode)	1. Shut down the battery and check the communications cable and power cable between the inverter and the battery are properly connected. 2. Turn off the AC output switch, DC input switch, and battery switch in order, and then turn on the battery switch, AC output switch, and DC input switch in sequence after 2 minutes. 3. If the fault still exists, contact your installer.

Item	Fault Code	Statement	Solution
179	1444	BDC1 Pre-Charging Resistor Fault	1.Turn off the AC output switch, DC input switch, and battery switch in order, and then turn on the battery switch, AC output switch, and DC input switch in sequence after 2 minutes. 3. If the fault still exists, contact your installer.
180	1445	BDC2 Pre-Charging Resistor Fault	
181	1446	BDC3 Pre-Charging Resistor Fault	
182	1447	Reversed Battery1 Polarity Connection Fault	Check whether the battery output is reversely connected.
183	1448	Reversed Battery2 Polarity Connection Fault	
184	1449	Reversed Battery3 Polarity Connection Fault	
185	1450	Battery1 Pre-Charging Relay Fault	1. Shut down the battery and check the communications cable and power cable between the inverter and the battery are properly connected. 2. Turn off the AC output switch, DC input switch, and battery switch in order, and then turn on the battery switch, AC output switch, and DC input switch in sequence after 2 minutes. 3. If the fault still exists, contact your installer.
186	1451	Battery2 Pre-Charging Relay Fault	
187	1452	Battery3 Pre-Charging Relay Fault	
188	1456	BDC1 Self-Checking Fault	1. Shut down the battery and check whether the communications cable and power cable between the inverter and the battery are properly connected. 2. Turn off the AC output switch, DC input switch, and battery switch in order, and then turn on the battery switch, AC output switch, and DC input switch in sequence after 2 minutes. 3. If the fault still exists, contact your installer.
189	1457	BDC2 Self-Checking Fault	
190	1458	BDC3 Self-Checking Fault	
191	1459	Battery1 Input Fault	1. Shut down the battery and check whether the power cable between the inverter and the battery are properly
192	1460	Battery2 Input Fault	

Item	Fault Code	Statement	Solution
193	1461	Battery3 Input Fault	connected. 2. Turn off the AC output switch, DC input switch, and battery switch in order, and then turn on the battery switch, AC output switch, and DC input switch in sequence after 2 minutes. 3. If the fault still exists, contact your installer.
194	1473	External Communication Error	1. Check whether the communications cables between the inverter and the battery are properly connected. 2. Check whether the length of the communication cable exceeds the upper threshold in the specification，and whether it is shielded twisted pair with drain wire. 3. Restart the battery. 4. If the fault still exists, contact your installer.
195	1474	Internal Communication Error	1. Restart the battery. 2. If the fault still exists, contact your installer.
196	1475	Overvoltage Protection	1. Restart the battery. 2. If the fault still exists, contact your installer.
197	1476	Undervoltage Protection	1. Restart the battery. 2. If the fault still exists, contact your installer.
198	1477	Charging Overcurrent Protection	1. Restart the battery. 2. If the fault still exists, contact your installer.
199	1478	Discharging Overcurrent Protection	1. Restart the battery. 2. If the fault still exists, contact your installer.
200	1479	Cell Overtemperature Protection	1. Check the ventilation and ambient temperature at the battery installation position. 2. If the ventilation is poor or the ambient temperature exceeds the

Item	Fault Code	Statement	Solution
			upper threshold, improve the ventilation and heat dissipation. 3. If the ventilation and ambient temperature both meet requirements, contact your installer.
201	1480	Cell Undertemperature Protection	1. Check whether the ambient temperature at the battery installation position is higher than the lower threshold. 2. If the fault still exists, restart the battery. 3. If the fault still exists, contact your installer.
202	1481	BMS Cell Imbalance	1. Restart the battery. 2. If the fault still exists, contact your installer.
203	1482	Hardware Protection	1. Restart the battery. 2. If the fault still exists, contact your installer.
204	1483	Circuit Fault	1. Restart the battery. 2. If the fault still exists, contact your installer.
205	1485	Voltage Sensor Fault	1. Restart the battery. 2. If the fault still exists, contact your installer.
206	1486	Temperature Sensor Fault	
207	1487	Current Sensor Fault	
208	1488	Relay Fault	
209	1505	External Communication Error	1. Check whether the communications cables between the inverter and the battery are properly connected. 2. Check whether the length of the communication cable exceeds the upper threshold in the specification，and whether it is shielded twisted pair with drain wire. 3. Restart the battery. 4. If the fault still exists, contact your

Item	Fault Code	Statement	Solution
			installer.
210	1506	Internal Communication Error	1. Restart the battery. 2. If the fault still exists, contact your installer.
211	1507	Overvoltage Protection	
212	1508	Undervoltage Protection	
213	1509	Charging Overcurrent Protection	
214	1510	Discharging Overcurrent Protection	
215	1511	Cell Overtemperature Protection	1. Check the ventilation and ambient temperature at the battery installation position. 2. If the ventilation is poor or the ambient temperature exceeds the upper threshold, improve the ventilation and heat dissipation. 3. If the ventilation and ambient temperature both meet requirements, contact your installer.
216	1512	Cell Undertemperature Protection	1. Check whether the ambient temperature at the battery installation position is higher than the lower threshold. 2. If the fault still exists, restart the battery. 3. If the fault still exists, contact your installer.
217	1513	BMS Cell Imbalance	1. Restart the battery. 2. If the fault still exists, contact your installer.
218	1514	Hardware Protection	
219	1515	Circuit Fault	
220	1517	Voltage Sensor Fault	
221	1518	Temperature Sensor Fault	

Item	Fault Code	Statement	Solution
222	1519	Current Sensor Fault	
223	1520	Relay Fault	

9.3 Troubleshooting

A. Please check the fault code of the inverter on the APP or website. If a message is displayed, record it before doing anything further.
B. Attempt the solution indicated in table above.
C. If the inverter LEDs are not on, check the following to make sure that the current state of the installation allows for proper operation of the unit:

- Is the inverter located in a clean, dry, adequately ventilated place?
- Have the DC input breakers opened?
- Are the cables adequately sized?
- Are the input and output connections and wiring in good condition?
- Are the configurations settings suitable for your particular installation?
- Are the display panel and the communications cable properly connected and undamaged?

Contact CSA Solar Customer Service for further assistance. Please be prepared to describe details of your system installation and provide the model and serial number of the unit.

9.4 Routine Maintenance

A. Safety Check

A safety check should be performed at least every 12 months by a qualified technician who has adequate training, knowledge and practical experience to perform these tests. The data should be recorded in an equipment log. If the inverter is not functioning properly or fails any of the tests, the inverter has to be repaired. For safety check details, refer to Chapter 2 of this manual.

B. Maintenance Checking List

During the process of using the inverter, the responsible person shall examine and maintain the machine regularly. The required actions are as follows:

Checking List	Checking Method	Maintenance Period
System Cleaning	Check whether there are dust and other blockades at the air outlet and heat sink. If necessary, clean the air outlet and heat sink.	Once half a year to a year (Depending on ambient dust content)
Fan	Check whether the fan makes abnormal noise when it is running and whether the fan blade is cracked. If necessary, change the fan.	Once a year
Cable Inlet Holes	Check whether the cable inlet hole of the device is partially blocked or the gap is large. If yes, perform supplementary sealing.	Once a year
Electrical	Check whether cables are loose.	Once half a year to a

Connection	Check whether the cable is damaged, especially whether the part of the cable in contact with the metal shell is cut.	year

Note: Only qualified individuals may perform these actions.

C. Fan Maintenance

The inverter's built-in fan cools and dissipates heat during its operation. If the fan does not work properly, the inverter cannot be effectively cooled, which will affect the efficiency of the inverter or cause derating operation. Therefore, it is necessary to keep the fan clean and replace the damaged fan in time.

The steps to clean and replace the fan are as follows:

- Before fan maintenance begins, be sure to power down the inverter and disconnect all power inputs to the inverter.
- After the inverter is powered down for 15 minutes, use the detection equipment for check to ensure that there is no voltage and current, and wear protective equipment to operate and maintain the inverter.
- Loosen the screws on the fan cover of the case.
- Loosen the fan tray retention screws, unplug the connector cable and pull out the fan, use a soft-bristled brush or vacuum cleaner to clean the fan or replace a damaged fan.
- Fan maintenance must be done by professional personnel.

10. Decommissioning

10.1 Dismantling the Inverter

- Disconnect the inverter from DC Input and AC output. Wait for at least 15 minutes for the inverter to fully de-energize.
- Disconnect communication and optional connection wirings. Remove the inverter from the bracket.
- Remove the bracket if necessary.

10.2 Packaging

If possible, please pack the inverter with the original packaging. If it is no longer available, you can also use an equivalent box that meets the following requirements.

- Suitable for loads more than 120 kg.
- Contains a handle.
- Can be fully closed.

10.3 Storage and Transportation

Store the inverter in dry place where ambient temperatures are always between -40°C – + 70°C. Take care of the inverter during the storage and transportation; keep less than 4 cartons in one stack. When the inverter or other related components need to be disposed of, please ensure they are handled and delivered to appropriate disposal sites in accordance with local waste handling regulations.

CSA Solar CO., LTD.
Add: Room 1008, Building A2, No.2533, Fenghuang Street, Shenzhen, GuangdongProvince, China
Tel: +86 186-2991-3491
WWW.CSASOLARS.COM