# 125kW-261 kWh 液冷工商业储能系统
# 产品规格书
# 125kW-261kWh liquid-cooled C&I energy storage system
# Product Specification

Pioneering Breakthroughs in Energy Storage for a Sustainable Future

**CSA Solar Co., Ltd.**

# 产 品 规 格 书

# PRODUCT SPECIFICATION

产 品 名 称 ： 125kW-261kWh 液冷工商业储能系统

Product Name： 125kW-261kWhliquid-cooled industrial and commercial energy storage system

产 品 型 号 ：

Product Model:

产 品 编 码 ：

Product Code：

版 本 ：

Version ： VER1.0

| 编制/时间<br>Prepare/Date | 审核/时间<br>Check/Date | 批准/时间<br>Approval/Date |
|---|---|---|
| | | |

| 客户承认 CUSTOMER APPROVAL<br>(请确认后签字回签一份，若无回签，则以下参数视为承认)<br>(Please sign and return a copy after confirmation. If there is no return, the following parameters are considered recognized) | |
|---|---|
| 客户编码:<br>Customer code | 项目代码<br>Project ID |
| 客户名称/日期:<br>Customer name/Date | |
| 客户签字/日期:<br>Customer signature /Date | |
| 销售代表：<br>Sales | |

## 版本更改历史记录 History Of Revision

| 版本号<br>Version | 更改时间<br>Date | 更改内容<br>Event |
|---|---|---|
| VER1.0 | 2025.1 | 首次建立<br>First time to establish |
| | | |
| | | |
| | | |
| | | |
| | | |
| | | |

# 1. 产品概述 Product Overview

本产品规格书规定了 125kW-261kWh 工商业储能系统的电气参数、产品说明、运输、储存要求与注意事项等。

This product specification specifies 125kW-261kWh industrial and commercial energy storageElectrical parameters, product description, transportation, storage requirements and precautions, etc.

## 1.1 名称 Name

125kW-261kWh 液冷电池储能柜

125kW-261kWh liquid-cooled battery energy storage cabinet

## 1.2 型号 Model

TNESS-Y-125kW-261kWh

## 1.3 使用环境 Use Environment

| 序号<br>number | 项目<br>project | 要求<br>requirement | 备注<br>note |
|---|---|---|---|
| 1 | 存储环境温度<br>Storage environment temperature | -30～60℃ | |
| 2 | 工作环境温度<br>operating ambient temperature | -20～55℃ | |
| 3 | 工作环境湿度<br>Humidity of working environment | RH≤95% | |
| 4 | 工作海拔要求<br>Work elevation requirements | ≤2000m | >2000m，降频率使用<br>> 2000m, Reduce frequency usage |

## 1.4 产品组成 Product Composition

| 序号<br>number | 组成部件<br>constituent elements | 数量<br>quantity | 备注<br>note |
|---|---|---|---|
| 1 | 电池箱 battery box | 5 | 1P52S |

| | | | |
|---|---|---|---|
| 2 | 高压箱<br>high-voltage compartment | 1 | 包括检测装置、保护装置<br>Including the detection device, the protection device |
| 3 | 热管理系统（TMS）<br>Thermal Management System (TMS) | 1 | 3-5kw液冷机组<br>3-5kw liquid cooling unit |
| 4 | 消防系统（SMS）<br>Fire protection system (SMS) | 1 | 感温、感烟、可燃气体+全氟己酮/ 气溶胶（可选）<br>Warm, smoke-sensitive, combustible gas + perfluorohexanone / aerosols (optional) |
| 5 | BMS 系统<br>BMS system | 1 | 5BMU+1BCU |
| 6 | EMS系统<br>EMS system | 1 | |
| 7 | PCS系统<br>PCS system | 1 | 额定125kW，最大额定130kW<br>Rated 125kW, maximum rated 130kW |
| 8 | 光伏DCDC系统<br>The Photovoltaic DCDC system | 1 | 30-50kW |
| 9 | 静态转换开关 STS | 1 | 200kW |

# 2. 适用范围 Scope Of Application

## 2.1 本文件范围 The Scope Of This Document

本产品规格书适用于山东图南储能科技有限公司提供的125kW-261kWh工商业储能系统。

This product specification is applicable to the 125kW-261kWh industrial and commercial energy storage system provided by Tunan Energy Storage Technology Co., LTD.

## 2.2 产品特征 Product Characteristics

✓ All-in-one 设计

All-in-one Design

✓ 标配交流接入电压：380V 三相五线

Standard AC access voltage: 380V three-phase five-wire

✓ 产品支持扩展功能

The product supports the extended functionality

✓ 可定制的 EMS 管理功能

Customizable EMS management features

✓ 选配 4G 云平台管理功能

Optional 4G cloud platform management function

✓ 运行状态指示灯展示功能，能直观判别当前运行状态

Operating state indicator light display function, can visually distinguish the current running state

✓ 产品采用高品质的电芯，并实现了电芯级全氟己酮消防

The product adopts high quality cell, and realizes the cell grade perfluorohexone fire fighting

✓ 产品采用高效稳定的功率逆变器件，可以提高能源系统的转化效率

The product adopts efficient and stable power inverter parts, which can improve the conversion efficiency of the energy system

✓ 产品采用高效节能的温控管理系统，可以提高系统能源的利用率

The product adopts energy efficiency and energy saving temperature control management system, which can improve the utilization rate of the system energy

✓ 精选安全可靠的电池管理系统，为电池实现多重保护

Select a safe and reliable battery management system to achieve multiple protection for the battery

✓ 精选安全可靠的能源管里模块，可实现消防，电池，温控，并离网等功能的一体化联动控制

Select the safe and reliable energy pipe module, which can realize the integrated linkage control of fire fighting, battery, temperature control, and off-grid and other functions

✓ 产品采用多重冗余保护措施，具有高可靠性，高稳定性和高抗干扰性能

The product adopts multiple redundant protection measures, with high reliability, high stability and high anti-interference performance

✓ 产品设计为单开门方式，便于运营维护

The product is designed as a single door opening mode to facilitate operation and maintenance

✓ 产品设计空间合理，可以有效的节省占地面积

Product design space is reasonable, which can effectively save the floor area

✓ 产品配置灵活，可以实现单机或多台并机联动工作

The product configuration is flexible, and it can achieve the single machine or multiple parallel machine linkage work

✓ 产品适用于电站式储能、工商业储能等多种应用场景

The products are suitable for power station energy storage, industrial and commercial energy storage and other application scenarios

### 2.3 应用场景 Application Scenario

- 工商业峰谷套利

Industrial and commercial peak and valley arbitrage

- 光储充融合应用

Optical storage and charging fusion applications

- 变压器容量管理

Transformer capacity management

- 需求侧响应服务

Demand-side response service

## 3. 参考标准 Reference Standards

产品执行标准需满足以下标准，凡是有更新的，最新的版本适用本协议。主要引用标准如下:

The product implementation standards shall meet the following standards, and the latest version shall apply to this Agreement.

The main reference criteria are as follows:

| 标准号 Standard number | 标准名称 Standard name |
|---|---|
| GB/T 36276-2018 | 电力储能用储能柜<br>Energy storage cabinet for electric energy storage |
| GB/T 34120-2017 | 电化学储能系统储能变流器<br>Electrochemical energy storage system energy storage converter |
| GB/T 13384-2008 | 机电产品包装通用技术条件 GB/T 191-2008 包装储运图示标志<br>General technical conditions for packaging of mechanical and electrical products GB / T 191-2008 packaging storage and transportation drawing mark |
| GB/T 2423.1-2008 | 电工电子产品环境试验第 2 部分：试验方法 试验 A： 低温<br>Environmental tests of electrical and electronic products- -Part 2: Test Methods Test A: Low temperature |

| | |
|---|---|
| GB/T 2423.2-2008 | 电工电子产品环境试验 第 2 部分：试验方法 试验 B：高 温<br>Environmental tests of electrical and electronic products- -Part 2: Test Methods Test B: high temperature |
| GB 4208-2008 | 外壳防护等级（IP 代码）<br>Housing protection level (IP code) |
| GB/T 17626 -2006 | 电磁兼容试验和测量技术<br>The EMC test and measurement techniques |
| GB 14048.1-2006 | 低压开关设备和控制设备 第 1 部分：总则<br>Low-voltage switchgear and control equipment- -Part 1: General Provisions |
| GB 8702-88 | 电磁辐射防护规定<br>Provisions on the protection of electromagnetic radiation |
| GB/T 2900.41-2008 | 电工术语 原电池和蓄电池<br>Electrician terms primary battery and storage battery |
| GB 21966-2008 | 锂原电池和蓄电池在运输中的安全要求<br>Safety requirements for lithium primary batteries and storage batteries in transportation |
| GJB 4477-2002 | 锂离子蓄电池组通用规范<br>General specification for lithium-ion battery pack |
| GB/T 31485 -2015 | 锂离子蓄电池通用技术条件<br>General technical conditions for lithium-ion battery |
| GB/T 36558-2018 | 电力系统电化学储能系统通用技术条件<br>General technical conditions for electrochemical energy storage system |
| GB/T 34131-2017 | 电化学储能电站储能柜管理系统技术规范<br>Technical specification for energy storage cabinet management system of electrochemical energy storage power station |
| GB/T 36548-2018 | 电化学储能系统接入电网测试规范<br>Electrochemical energy storage system access to the power grid test specifications |
| GB/T 13384-2008 | 机电产品包装通用技术条件<br>General technical conditions for mechanical and electrical product packaging |
| GB/T 191-2008 | 包装储运标准<br>Packaging storage and transportation standards |
| EN 62477-1 | 关于电力电子变换器设备和系统的安全通用标准；<br>General safety standard for the use of power electronic converter equipment and system; |
| IEC 62619 | 含碱性或其他非酸性电解质的二次电池-用于工业应用的二次锂电池的安全要求<br>Secondary batteries containing alkaline or other non-acidic electrolytes-secondary lithium batteries for industrial applications<br>Safety requirements of the pool |

| | |
|---|---|
| IEC 63056 | 电力储能锂电池安全的标准<br>Power energy storage lithium battery safety standard |
| IEC 60730-1 | 家用和类似用途电器的自动控制器的安全第 1 部分：一般要求<br>Safety of automatic controllers for household and similar electrical appliances- -Part 1: General requirements |

## 认证要求 Certification Requirements:

| 序号<br>number | 名称<br>name | 要求<br>requirement |
|---|---|---|
| 1 | 储能电池<br>Energy storage battery | 有认证资质的第三方型式试验认证报告<br>Third-party type test certification report with certification qualification |
| 2 | BMS系统<br>BMS system | 有认证资质的第三方型式试验认证报告<br>Third-party type test certification report with certification qualification |
| 3 | PCS设备<br>PCS equipment | 有认证资质的第三方试验认证报告，高低压穿越报告（需 提供充电和放电两种模式下）<br>Qualified third party test certification report, high and low voltage crossing report (in both charging and discharge modes) |
| 4 | EMS系统<br>EMS system | 有认证资质的第三方型式试验认证报告<br>Third-party type test certification report with certification qualification |

## 缩略语 Abbreviation:

| | |
|---|---|
| BMS | 电池管理系统<br>Battery Management System |
| BMU | 电池管理单元<br>Battery Management Unit |
| BCU | 电池簇控制管理单元<br>Battery Cluster management Unit |
| EMS | 能量管理系统<br>Energy Management System |
| ETH | 以太网通讯模块<br>The Ethernet communication module |
| CAN | 控制器局域网<br>Controller Area Network |
| BOL | 寿命初始<br>Begin Of Life |
| EOL | 寿命终止<br>End Of Life |
| SOC | 荷电状态<br>State Of Charge |
| SOE | 可用能量状态<br>State Of Energy |
| SOH | 健康状态<br>State Of Health |
| SOP | 功率状态<br>State Of Production |

# 4. 产品参数 Product Parameters

## 4.1 储能柜系统参数 System Parameters Of The Energy Storage Cabinet

| 序号<br>number | 项目<br>project | 参数<br>parameter | 参数偏差<br>parameter deviation | 备注<br>note |
|---|---|---|---|---|
| 一、交流侧参数（并网）<br>Ⅰ. AC-side parameters (grid connection) | | | | |
| 1 | 额定功率<br>power rating | 125kW | | |
| 2 | 交流额定电压<br>AC rated voltage | AC400V | -15%~+15% | |
| 3 | 额定频率<br>rated frequency | 50/60HZ | | |
| 4 | 交流输出接线<br>AC output wiring | 3L+N+PE | | 三相五线<br>Three-phase five-wire |
| 5 | 功率因数<br>power factor | 0.99 | | |
| 6 | 交流最大电流<br>AC maximum current | 198A | | |
| 二、交流侧参数（离网）<br>Ⅱ. AC-side parameters (off-grid) | | | | |
| 7 | 额定功率<br>power rating | 125kW | | |
| 8 | 交流额定电压<br>AC rated voltage | AC400V | -15%~+15% | |
| 9 | 额定频率<br>rated frequency | 50/60HZ | | |
| 10 | 交流输出接线<br>AC output wiring | 3L+N+PE | | |
| 11 | 功率因数<br>power factor | 0.99 | | |
| 12 | 交流最大电流<br>AC maximum current | 198A | | |
| 三、直流侧参数<br>Ⅲ. The DC-side parameters | | | | |
| 13 | 电池类型<br>battery type | 磷酸铁锂<br>lithium iron phosphate | | |

| | | | | |
|---|---|---|---|---|
| 14 | 组合方式<br>compound mode | 1P260S | | |
| 15 | 额定容量<br>rated capacity | 314Ah | | |
| 16 | 运行电压范围<br>operating voltage range | 650-949V | | 2.5-3.65V |
| 17 | 额定电压<br>rated voltage | 832V | | |
| 18 | 额定电流<br>rated current | 157A | 0.5C | |
| 19 | 额定能量<br>rated energy | 261.248kWh | | |
| 20 | 额定功率<br>power rating | 125kW | | |
| 四、保护<br>IV. Protect | | | | |
| 21 | 交流过流/短路保护<br>AC overcurrent / short-circuit protection | Yes | | Yes |
| 22 | 交流过压/欠压保护<br>AC overvoltage / undervoltage protection | Yes | | Yes |
| 23 | 交流过频/欠频保护<br>AC overfrequency / underfrequency protection | Yes | | Yes |
| 24 | 直流过流/短路保护<br>DC current / short circuit protection | Yes | | Yes |
| 25 | 直流过压/欠压保护<br>DC over/ undervoltage protection | Yes | | Yes |
| 26 | 直流极性反接保护<br>DC polarity reverse protection | Yes | | Yes |
| 27 | 过温保护<br>Overtemperature protection | Yes | | have |

| 五、系统规格<br>V. System specifications | | | | |
|---|---|---|---|---|
| 28 | 尺寸 (L*W*H)<br>Dimensions (L * W * H) | 1200*1400*2490mm | **尺寸参考**,以实物为准<br>Size referenceSubject to physical objects | |
| 29 | 重量<br>weight | ＜3000kg | **尺寸参考**,以实物为准<br>Size referenceSubject to physical objects | |
| 30 | 系统往返效率<br>System round-trip efficiency | ⩾88% | | **@0.5C ， 25℃ ±2℃** |
| 31 | 噪音noise | ＜80dB | | |
| 32 | 防护等级<br>levels of protection | IP55 | | IP55 |
| 33 | 防腐等级<br>Anti-corrosion grade | C4 | | C4 |
| 34 | 冷却方式<br>cooling-down method | 液冷<br>liqukd cooling | | |
| 35 | 通讯接口<br>communication interface | RS485/以太网/CAN<br>RS485/Ethernet/CAN | | |
| 36 | 接线方式<br>mode of connection | | | |
| 六、工作环境<br>VI. Working environment | | | | |
| 37 | 工作环境温度<br>operating ambient temperature | -35℃~+55℃ | >45 ℃ 可 降 额<br>>45 ℃ can be derated | - 35 ℃ ~ +55℃ |
| 38 | 存储环境温度<br>Storage environment temperature | -40℃~+70℃ | | - 40 ℃ ~ +70℃ |
| 39 | 允许相对湿度<br>Allow relative humidity | 0～95%，无凝露<br>0~95%, with no condensation | | 0～95%, 无凝 露<br>0~95%, with no condensation |
| 40 | 海拔高度<br>above sea level | 4000m, >2000m 时 需 降额<br>4000m,> 2000m required | | 4000m ， >200 0m 时需降额<br>4000m,> 200 0m required |

## 4.2 对外接口定义 Definition Of The External Interface

| 接口<br>joggle | 接口定义<br>Interface definition | 功能说明<br>unction declaration | 备注<br>remarks |
|---|---|---|---|
| 交流断路器<br>AC circuit breaker | A | PCS-A 相<br>PCS-A Phase | 连接市电三相电A 相<br>Connect the mains-electric three-phase electric A-phase |
| | B | PCS-B 相<br>PCS-B Phase | 连接市电三相电B 相<br>Connect to mains three-phase power B phase |
| | C | PCS-C 相P<br>CS-C Phase | 连接市电三相电C 相<br>Connect to the mains three-phase C phase |
| | N | 零线N<br>Zero line N | 连接市电三相电N 线<br>Connect the N line of the three-phase AC power |
| | PE | 接地线<br>Ground wire | 连接市电三相电PE 线<br>Connect the PE wire of the three-phase mains electricity |
| Mppt | PV+ | 光伏接入+<br>Photovoltaic access+ | 连接光伏接入+<br>Connect to photovoltaic access+ |
| | PV- | 光伏接入-<br>Photovoltaic access- | 连接光伏接入-<br>Connecting photovoltaic access- |
| 关口电表<br>Gateway electricity meter | | | 连接EMS 控制充放电<br>Connect EMS to control charging and discharging |
| 计量电表<br>Metering meter | | | 连接EMS 进行充放电量计量<br>Connect to EMS for charge and discharge measurement |
| 交换机<br>Exchange | | | 支持多台并机连接口<br>Support multiple parallel connection ports |

## 4.3 产品尺寸 Product Dimensions

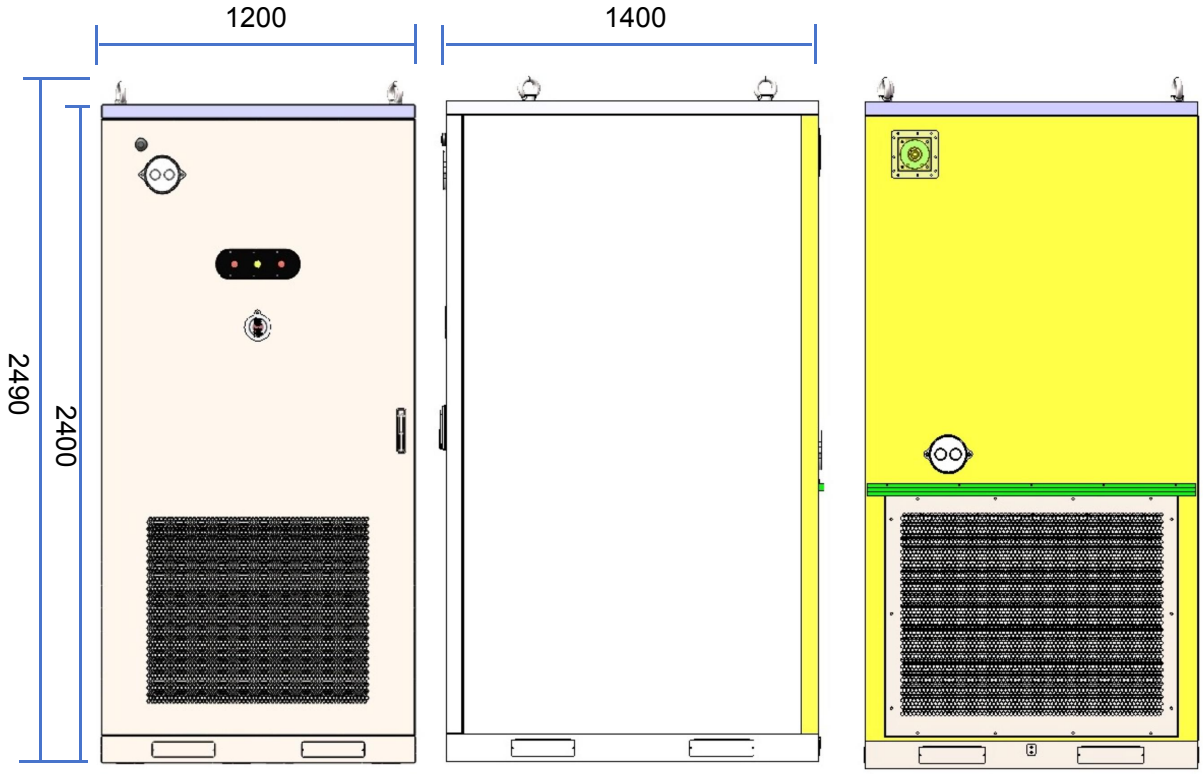


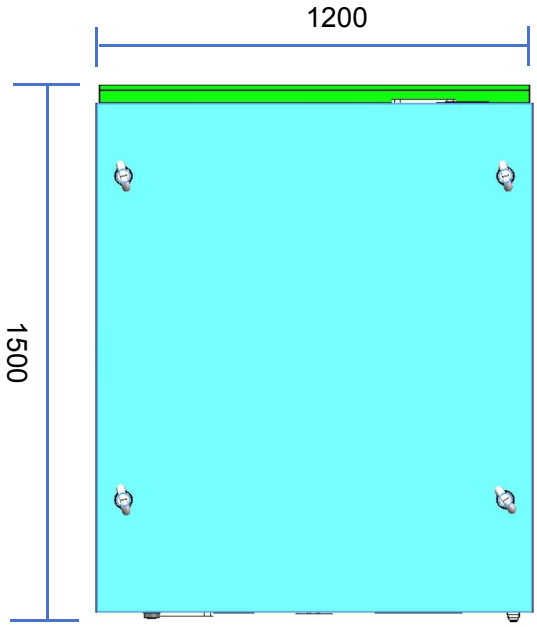


尺寸(长*宽*高)： 1200*1400*2490mm（示意图，具体以实物为准）

Dimensions (L * W * H):1200*1400*2490mm

(schematic diagram, the actual object shall prevail)

## 4.4 系统拓扑图 System Topology Diagram

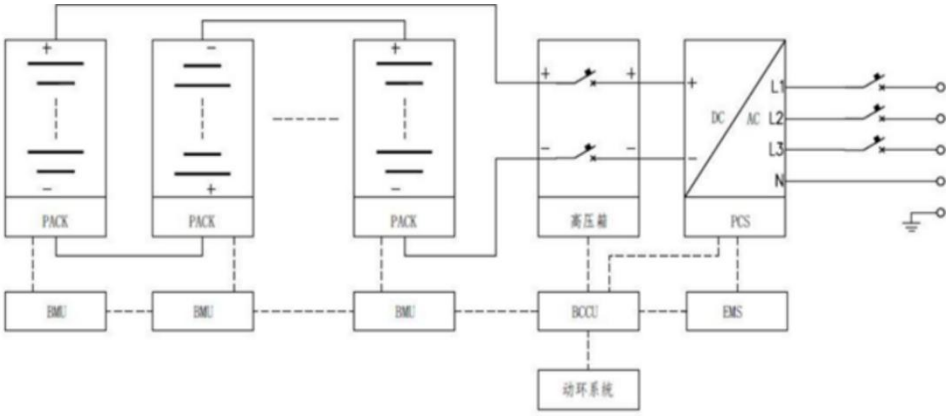


注：实线连接部分为能量流，虚线连接部分为信息流。

## 4.5 内部布局图 Internal Layout

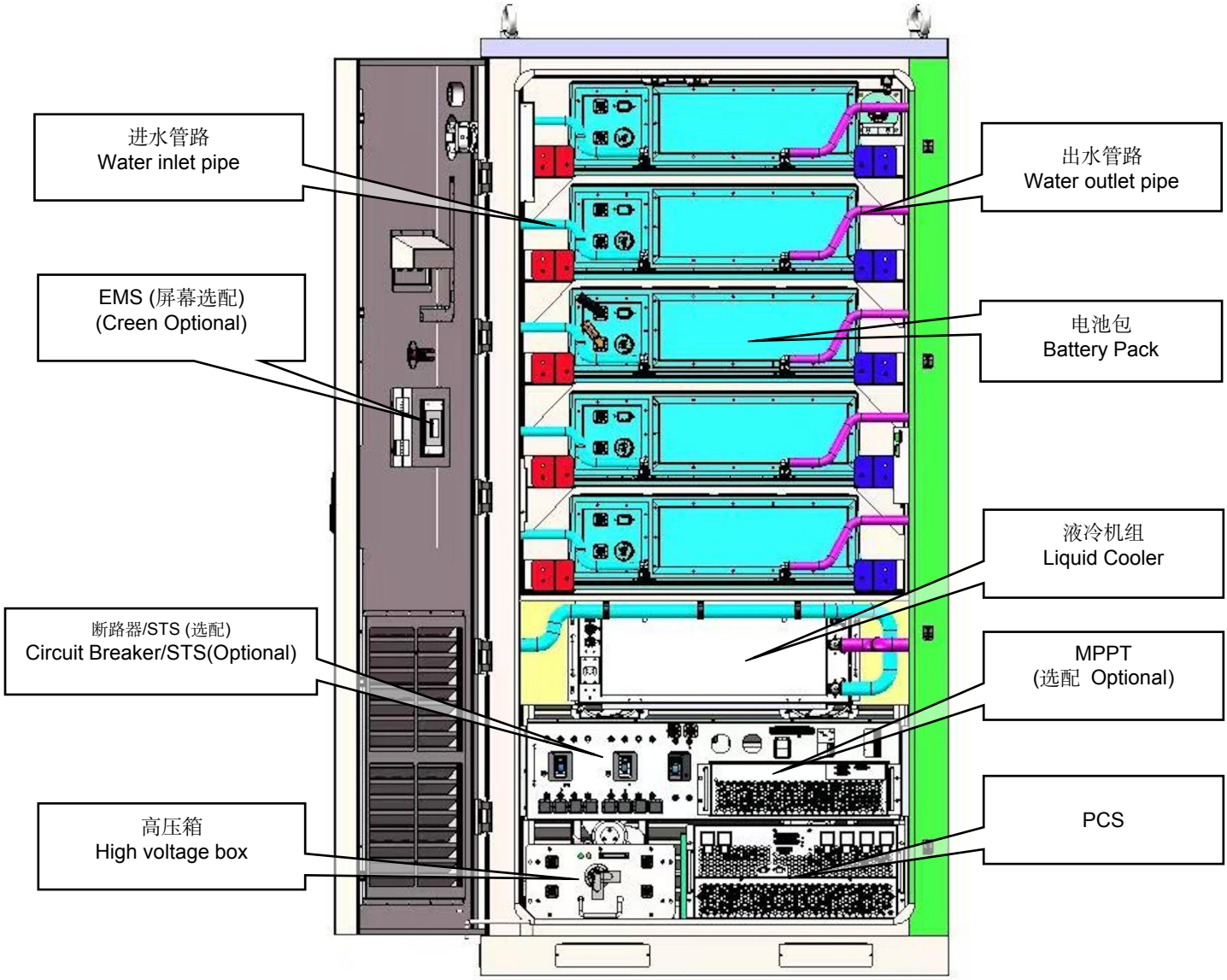


内部示意图（示意图，具体以实物为准）
Internal schematic diagram (schematic diagram, the actual object shall prevail)

## 4.6 电气框图 Electrical Block Diagram

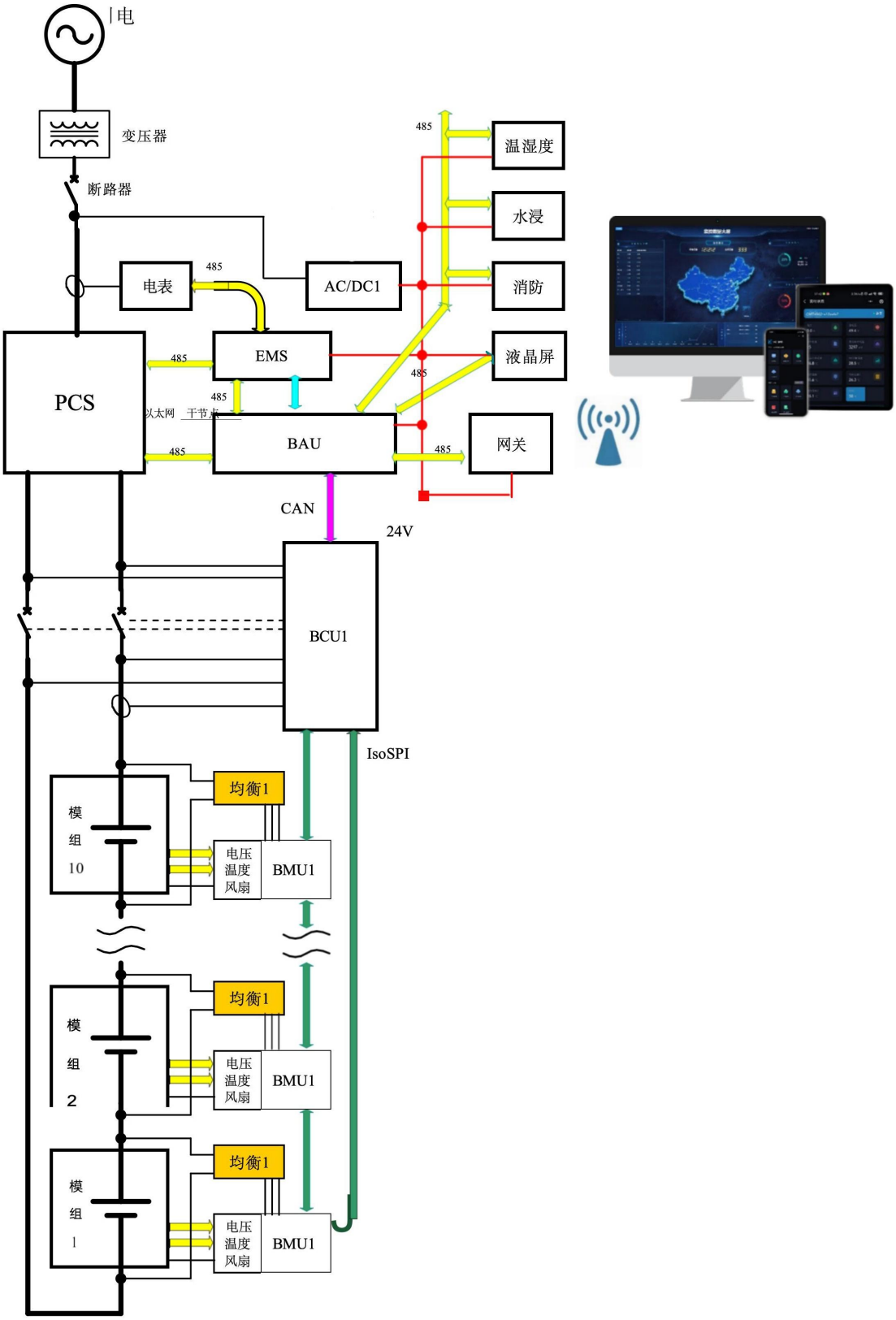


典型电气框图（示意图）
Typical electrical block diagram (schematic diagram)

# 5. 产品关键配件 Key Product Accessories

## 5.1 电池系统 Battery System

本产品采用 3.2V/314Ah 方型铝壳磷酸铁锂电芯，该电芯技术参数如下：

This product uses 3.2V/314Ah square aluminum shell lithium iron phosphate battery cells, the technical parameters of the battery cells are as follows:

| 项目 Project | 规格参数 Specifications | 备注 Note |
|---|---|---|
| 电池类型<br>Battery type | LFP | 方形、铝壳<br>Square, aluminum shell |
| 标称电压（V）<br>Nominal voltage (V) | 3.2 | |
| 标称容量（Ah）<br>Nominal capacity (Ah) | 314 | |
| 标称充电电流 (A) Nominal charging current (A) | 157 | |
| 标称放电电流 (A) Nominal discharge current (A) | 157 | |
| 电压范围（V）<br>Voltage range (V) | 2.5~3.65V | |
| 尺寸（宽×高×深 mm）<br>Dimensions<br>(width×height×depth mm) | 173.7mm×207.2mm×71.7mm | 含极柱<br>(With Terminal) |
| 重量（kg）<br>Weight (kg) | 5.6±0.3kg | |
| 存储温度范围(℃)<br>Storage temperature range (℃) | -20℃~35℃（SOC:40%-60%） | 建议：0～25℃，50±5%SOC 存储<br>Recommendation: 0～25℃, 50 ± 5%SOC storage |
| 工作温度范围(℃)<br>Operating temperature range (℃) | 充电 Charge：0～60℃<br>放电 Discharge：-30～60℃ | |

本产品所采用电池模块应满足以下要求。电池模块外观应无变形及裂纹， 表面应干燥、无外伤、无污物，排列整齐、连接可靠，且标识清晰、正确。

The battery modules used in this product should meet the following requirements: The battery module appearance should be free of deformation and cracks, the surface should be dry, without external injuries or dirt, arranged neatly, connected reliably, and clearly and correctly labeled.

| 项目 Project | 规格参数 Specifications | 备注 Note |
|---|---|---|
| 组合方式<br>Combination | 52S1P | |
| 额定容量（Ah）<br>Rated capacity (Ah) | 314 | |
| 额定能量（kWh）<br>Rated energy (kWh) | 52.250 | |
| 额定充放电倍率<br>Rated charge and discharge rate | 0.5C | |
| 标称电压（V）<br>Nominal voltage (V) | 166.4 | |
| 运行电压范围（V）<br>Operating voltage range (V) | 130-189.8 | |
| 尺寸（宽×高×深 mm）<br>Dimensions (width x height x depth mm) | 1145*245*792 | |

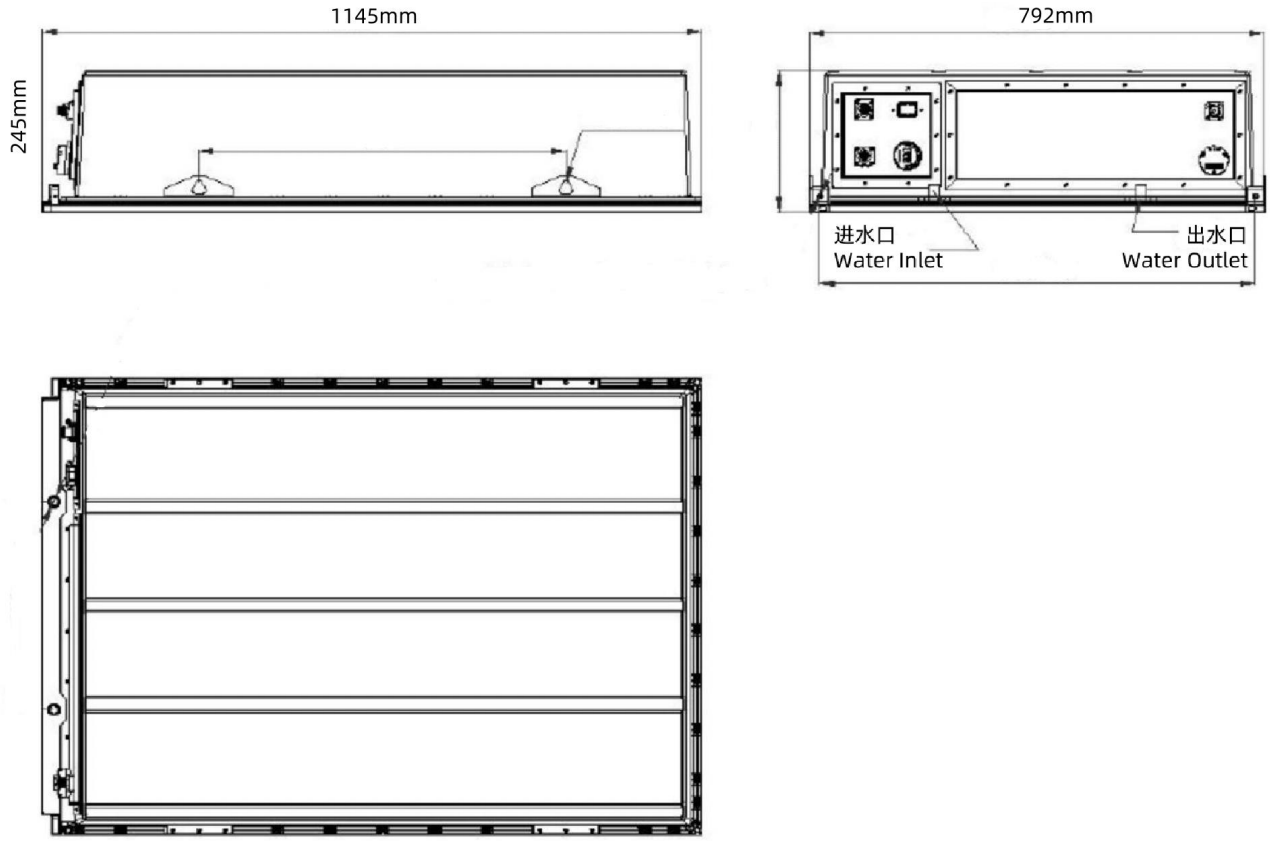


电池插箱尺寸示意图 Schematic diagram of battery plug-in box dimensions

本产品电池簇包括5个电池模块和1套高压箱，共计1P260S，成组能量261.248kWh，具体电池簇参数如下表。

The battery cluster of this product includes 5 battery modules and 1 set of high-voltage box, totaling 1P260S, with a group energy of 261.248kWh. The specific battery cluster parameters are shown in the following table.

**电池簇规格参数**
**Specification parameters of battery cluster**

| 项目 Project | 规格参数 Specifications | 备注 Note |
|---|---|---|
| 采用电芯<br>battery cells | LFP3.2V314Ah | |
| 组合方式<br>Combination | 1P260S | |
| 关键部件<br>Key Components | 5个模块<br>5 modules | 1P52S |
| 电池簇电压范围（V）Battery cluster voltage range (V) | 650 ~ 949 | |
| 电池簇标称容量（kWh）Battery pack nominal capacity (kWh) | 261.248 | |
| 最大充电电流（A）<br>Max charging current (A) | 157 | |
| 最大放电电流（A）<br>Max discharge current (A) | 157 | |
| 充放电倍率<br>Charge-discharge rate | 0.5C | |

电池管理系统高压控制箱是储能系统设计的一款标准化、可配置的高压电力回路管理单元，是连 接电池簇和储能变流器的中间单元，具有电池簇电压、电池簇电流采集，电池簇回路接触器控制和保 护等功能。电池管理系统高压控制箱内安装断路器、接触器、熔断器、预充控制电路、电流传感器、电池簇控制主控单元（BCU）、开关电源等，在设计时已充分考 虑各元器件的电气特性、安全性能及 可操作维护性，具有结构紧凑、配置灵活、安全可靠等 特点。内置的储能电池簇控制主控单元（BCU）具有CAN、485通讯总线接口，可实现高压 控制箱与储能电池管理模块、储能电池管理系统主机以及储能变流器、EMS之间的通讯功能，实现储能电池簇的控制、保护和数据通讯功能。

The high-voltage control box of the battery management system is a standardized and configurable high-voltage power circuit management unit designed for the energy storage system. It is an intermediate unit connecting the battery cluster and the energy storage converter, and has the functions of battery cluster voltage and battery cluster current collection, battery cluster circuit contactor control and protection. The high-voltage control box of the battery management system is equipped with circuit breakers, contactors, fuses, pre-charge control circuits, current sensors, battery cluster control main unit (BCU), switching power supplies, etc. The electrical characteristics, safety performance and operability and maintainability of each component have been fully considered during the design, and it has the characteristics of compact structure, flexible configuration, safety and reliability. The built-in energy storage battery cluster control main unit (BCU) has CAN and 485 communication bus interfaces, which can realize the communication function between the high-voltage control box and the energy storage battery management module, the energy storage battery management system host, the energy storage converter, and the EMS, and realize the control, protection and data communication functions of the energy storage battery cluster.

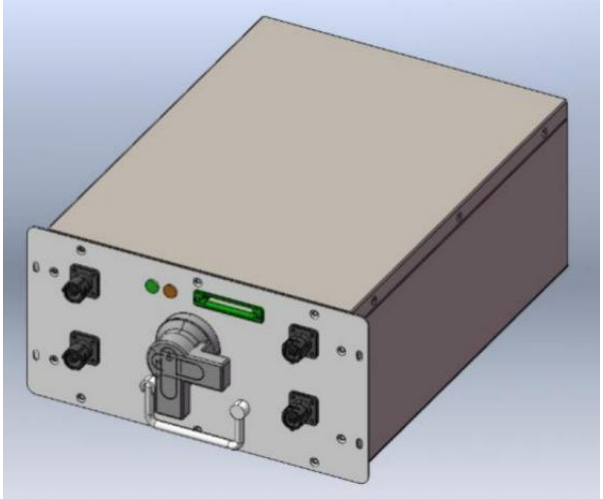

高压箱示意图　Schematic diagram of high-voltage box

电池管理系统 (BMS) 用于监测储能元件的状态和性能，以保证其寿命和安全性，通过 实时监测电池数据，判断是否需要进行维护或更换。

The battery management system (BMS) is used to monitor the status and performance of energy storage components to ensure their life and safety. It monitors battery data in real time to determine whether maintenance or replacement is required.

| 项目 Project | 规格参数 Specifications | 备注 Note |
|---|---|---|
| 工作电源<br>Working power supply | 电压范围 9~32V (典型值 12V、24V)<br>Voltage range 9~32V (typical value 12V, 24V) | |
| 工作温度<br>Operating temperature | -40℃~85℃ | |
| 存储温度<br>Storage temperature | -40℃~105℃ | |
| 工作湿度<br>Operating humidity | 5%~95% | |
| 电流检测精度<br>Current detection accuracy | ±0.5%FSR | |
| 高压检测精度<br>High voltage detection accuracy | ±0.5%/ 0.5V | |
| 绝缘检测精度<br>Insulation detection accuracy | ±10%/10KΩ | |
| 均衡方式<br>Balanced method | 主动均衡<br>Passive Balance | |
| SOC 估算精度<br>SOC estimation accuracy | ≤5% | |
| 充电口温度检测精度<br>Charging port temperature detection accuracy | ±1℃(10KNTC) | |
| 支持协议及标准<br>Support protocols and standards | CCP、UDS、OBD-ii、GB/T3296 | |

## 5.2 储能变流器 PCS Power Conversion System

储能变流器 (PCS) 通过三相三电平变换器，实现整流、逆变。整流输出由三相交流电变换为直流电后注入储能系统，逆变输出经滤波器滤波生成三相交流电，供交流负载使用或并入电网。储能变流器采用抽屉式设计，具备 IP20 防护等级，产品结构紧凑，安装运维方便。

The Power Conversion System (PCS) realizes rectification and inversion through a three-phase three-level converter. The rectifier output is converted from three-phase AC to DC and then injected into the energy storage system. The inverter output is filtered by the filter to generate three-phase AC for use by AC loads or incorporated into the power grid. The energy storage converter adopts a drawer-type design with an IP20 protection level. The product has a compact structure and is easy to install and maintain.

| 项目 Project | 规格参数 Specifications |
| --- | --- |
| 直流参数 DC parameters | |
| 最大直流电压<br>Maximum DC voltage | 1000V |
| 直流电压范围<br>DC voltage range | 600~1000V |
| 最大直流电流<br>Maximum DC current | 212A |
| 输入路数<br>Number of input channels | 1 |
| 交流参数（并网）AC parameters (grid-connected) | |
| 额定功率<br>Rated power | 125kW |
| 视在功率<br>Apparent power | 138kVA@45℃ |
| 额定电压<br>Rated voltage | 3/PE， 380V |
| 允许电压范围<br>Allowable voltage range | 323~418V |
| 最大交流电流<br>Maximum AC current | 200A |
| 额定电网频率<br>Rated grid frequency | 50Hz |
| 电网频率范围<br>Grid frequency range | 45~55Hz |
| 交流电流谐波<br>AC current harmonics | ＜3%（额定功率时）<br>＜3% (at rated power) |
| 直流分量<br>DC component | ＜0.5%（额定功率时）<br>＜0.5% (at rated power) |
| 功率因数<br>Power Factor | >0.99（额定功率时）<br>>0.99 (at rated power) |
| 功率因数可调范围<br>Power factor adjustable range | 1（超前）~1（滞后）<br>1 (leading) ~ 1 (lagging) |
| 交流参数（离网）AC parameters (off-grid) | |
| 额定输出功率<br>Rated output power | 125kW |
| 最大输出功率<br>Maximum output power | 138kVA@45℃ |
| 额定输出电压<br>Rated output voltage | 400V |

| | |
|---|---|
| 交流电压谐波<br>AC voltage harmonics | ＜3%（线性负载）<br>＜3%（Linear load） |
| 额定频率<br>Rated frequency | 50Hz |
| 效率<br>efficiency | |
| 最大效率<br>Maximum efficiency | 98.5% |
| 保护功能<br>Protection function | |
| 直流开关<br>DC switch | 具备 Yes |
| 交流开关<br>AC switch | 具备 Yes |
| 电网监测<br>Power grid monitoring | 具备 Yes |
| 绝缘监测<br>Insulation monitoring | 具备 Yes |
| 直流反接保护<br>DC reverse protection | 具备 Yes |

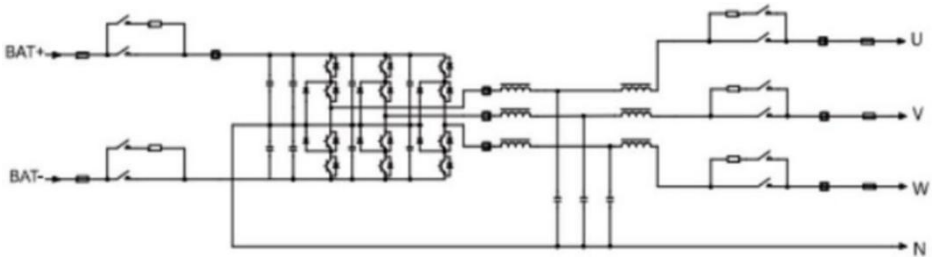


## 5.3 Mppt系统　Mppt System

双向 DC/DC 转换模块（DC to DC converter），通过使用电子开关来调整输入电压的形式与大小，以达到产生所需电压的目的。其主要组成有主电路、驱动模块、控制模块等。DC模 块控制单元通过通信接口接收到控制指令，对输入电压进行升/降处理，输出一定大小的电压。双向DC/DC 转换模块的控制单元与 EMS(或显示屏等控制端）进行 485 通讯，接收EMS下发指令， 实现电压目的性升/降。采用三电平拓扑结构，具有更高效、更小体积和更小的EMI干扰等优点，支持 MPPT 模式接入光伏板实现最大功率跟踪或接入AC/DC给负载供电。

The bidirectional DC/DC converter module (DC to DC converter) uses electronic switches to adjust the form and size of the input voltage to achieve the purpose of generating the required voltage. Its main components include the main circuit, drive module, control module, etc. The DC module control unit receives the control command through the communication interface, increases/decreases the input voltage, and outputs a certain voltage. The control unit of the bidirectional DC/DC converter module communicates with the EMS (or

control end such as the display screen) via 485, receives the command issued by the EMS, and realizes the purposeful increase/decrease of the voltage. It adopts a three-level topology structure, which has the advantages of higher efficiency, smaller size and smaller EMI interference. It supports MPPT mode to connect to photovoltaic panels to achieve maximum power tracking or connect to AC/DC to power the load.

| 电气参数 Electrical parameters | | | |
|---|---|---|---|
| 参数名<br>Parameter name | 参数值<br>Parameter Value | | 备注<br>Note |
| 型号 Model | | EDCS50-M-M | |
| 功率 Power | | 50kW | 功率可过载 1.1 倍（电压过载）<br>Power can be overloaded 1.1 times (voltage overload) |
| 高压侧电压<br>high side voltage | 250~1000V | | |
| 高压侧电流<br>High side current | | 最大80A<br>Max. 80A | |
| 低压侧电压<br>Low side voltage | 0~900V | | 低压侧电压不能大于高压侧电压<br>The voltage on the low voltage side cannot be greater than the voltage on the high voltage side |
| 低压侧电流<br>Low side current | | 最大 100A<br>Max. 100A | 低压侧 500V以上设备满载运行， 500V以下降额运行<br>On the low voltage side, equipment above 500V operates at full load, and below 500V operates at reduced load. |
| 最大效率<br>Maximum efficiency | 大于99%<br>Greater than 99% | | |
| 工作模式<br>Working Mode | 恒压、双向恒压、恒流、恒功率、 升压MPPT、降压MPPT<br>Constant voltage, bidirectional constant voltage, constant current, constant power, boost MPPT, buck MPPT | | |
| 电压稳定度<br>Voltage stability | ±1% | | 静态<br>Static |
| | ±5% | | 动态<br>dynamic |
| 电流稳定度<br>Current stability | ±1% | | 静态<br>Static |

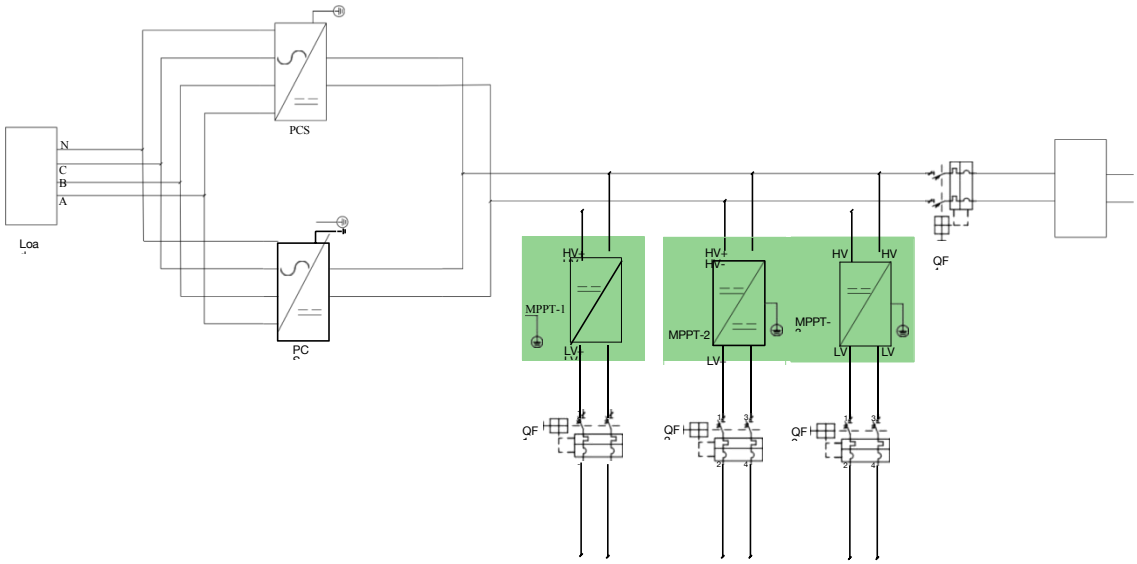


## 5.4 消防系统 Fire Protection System

消防系统主要由抑制装置控制器（主机集成了抑制剂瓶组、控制器、驱动装置、信号反馈 装置）、烟感探测装置、温感探测装置， 声光报警启动开关、水消防喷嘴等部件组成。可以实现电芯级、PACK 级、仓级三级消防。其中消防药剂采用全氟己酮，能够有效保证储能柜的运 行安全。

The fire protection system is mainly composed of suppression device controller (the host integrates the suppression device bottle group, controller, drive device, signal feedback device), smoke detection device, temperature detection device, sound and light alarm start switch, water fire nozzle and other components. It can realize three levels of fire protection at the cell level, PACK level and warehouse level. The fire protection agent uses perfluorohexanone, which can effectively ensure the safe operation of the energy storage cabinet.

## 5.5 水冷机组

| 液冷机组参数<br>Parameters of the Liquid-cooled Chiller | | 6KW 液冷机组<br>6KW Liquid-cooled Chiller |
|---|---|---|
| 类目Category | 单位Unit | 参数Parameter |
| 额定交流输入电源<br>Rated AC Input Power Supply | V/Hz | 220±10%/50±1Hz |
| 供液流量 Liquid Supply Flow | L/min | 50 |
| 供液压力 Liquid Supply Pressure | kPa | 70 |
| 制冷量Cooling Capacity（W18/L35℃） | kW | 6 |

| | | |
|---|---|---|
| 额定制冷输入功（W18/L35℃）<br>Rated Cooling Input Power | kW | 2.4 |
| 能效比（W18/L35℃）<br>Energy Efficiency Ratio | W/W | 2.5 |
| 制冷量（W18/L45℃）Cooling Capacity | kW | 5 |
| 额定制冷输入功（W18/L45℃）<br>Rated Cooling Input Power | kW | 2.63 |
| 能效比（W18/L45℃）<br>Energy Efficiency Ratio | W/W | 1.9 |
| 制热量Heating Capacity | kW | 2 |
| 外形尺寸(宽*深*高)Dimensions | mm | 700*900*245 |
| 安装方式Installation Method | / | 法兰/底部安装<br>Flange/Bottom Installation |
| 最大声压级噪音（@1.5m@35℃）<br>Maximum Sound Pressure Level Noise | dB(A) | ≤75(18℃@35℃ RH50%) |
| 防水防尘等级<br>Waterproof and Dustproof Grade | / | 整机 IP54（电控箱体 IP56）<br>IP54 for the Whole Unit (IP56 for the Electrical Control Box) |
| 制冷剂 Refrigerant | / | R410A |
| 寿命 Service Life | Years | >10 |

# 6. 包装、储存、运输、维护
# Package.Storage. Transportation. Usage And Maintenance

通过正确的包装、储存、运输和维护， 可以延长储能柜的寿命和稳定性，同时也能够确保 其安全性和可靠性。因此， 在任何情况下，用户都应该严格遵循储能柜的相关规定，并采取必 要的措施来保证其正常工作和安全使用。

Through proper packaging, storage, transportation and maintenance, the life and stability of the energy storage cabinet can be extended, while its safety and reliability can also be ensured. Therefore, in any case, users should strictly follow the relevant regulations of the energy storage cabinet and take necessary measures to ensure its normal operation and safe use.

## 6.1 包装 Package

储能柜应该采用专门的包装箱进行包装，保障其在运输过程中不受损坏。包装箱内应该放置防震材料，以防止储能柜在运输过程中受到撞击或振动。包装箱外标明产品名称、型号、数 量、

毛重、制造厂商及联络地址、出厂日期，　还应有“小心轻放”、“怕湿”、“向上”等必 要标志，其包装储运的标志应符合 GB-191-2000 的规定。

Energy storage cabinets should be packed in special packaging boxes to ensure that they are not damaged during transportation. Shockproof materials should be placed in the packaging boxes to prevent the energy storage cabinets from being hit or vibrated during transportation. The product name, model, quantity, gross weight, manufacturer and contact address, and production date should be marked on the outside of the packaging box. There should also be necessary signs such as "Handle with care", "Avoid moisture", and "Upward". The packaging, storage and transportation signs should comply with the provisions of GB-191-2000.

包装后的储能柜应该储存在低温、干燥和通风良好的地方，不应靠近火源和高温的地方。长期储存。长期储存的储能柜（超过 3 个月）须置于干燥、凉爽处。每 6 个月对储能柜进 行一次充放电，储存电压为 3.2～3.35V(电池组中串联的每节电池)。

The packaged energy storage cabinet should be stored in a low temperature, dry and well-ventilated place, and should not be near fire or high temperature.

Long-term storage. Energy storage cabinets for long-term storage (more than 3 months) must be placed in a dry and cool place. Charge and discharge the energy storage cabinet once every 6 months, and the storage voltage is 3.2~3.35V (each battery in series in the battery pack).

## 6.2　储存 Storage

储能柜建议储存在环境 25±5℃、相对湿度 45%～85%、大气压力 70kPa～106kPa，放置于干燥、通风处，避免与腐蚀性物质接触，远离火源和高温环境。电芯在贮存时，其应以40%~ 60%的荷电态贮存，储能柜长期不使用时，建议每三个月左右进行满充满放一次，以延长其使用寿命。

It is recommended that the energy storage cabinet be stored in an environment of 25±5℃, relative humidity of 45% ~ 85%, atmospheric pressure of 70kPa ~ 106kPa, in a dry and ventilated place, avoiding contact with corrosive substances, and away from fire and high temperature environment. When storing, the battery cell should be stored at a charge state of 40%~60%. When the energy storage cabinet is not used for a long time, it is recommended to fully charge and discharge it every three months to extend its service life.

## 6.3 运输 Transportation

储能柜应包装后进行运输，在储能柜运输过程中，必须遵守相关的国家和行业规定。运输 时应该防止剧烈振动、冲击或挤压，防止日晒雨淋，避免储能柜受到撞击或振动，避免电池在 运输中正负极短接。其次选择合适的运输方式和包装材料，确保储能柜能够安全运输。

The energy storage cabinet should be packaged before transportation. During the transportation of the energy storage cabinet, relevant national and industry regulations must be observed. During transportation, it should be protected from severe vibration, impact or extrusion, exposure to the sun and rain, and the energy storage cabinet should be protected from impact or vibration, and the positive and negative poles of the battery should be short-circuited during transportation. Secondly, choose the appropriate transportation method and packaging materials to ensure that the energy storage cabinet can be transported safely.

## 6.4 维护 Usage And Maintenance

用户在使用储能柜时，应该遵循说明书上的使用要求。如出现异常情况， 如温度升高、电 池变形等，应该立即停止使用并咨询相关的售后服务人员。可以定期清洁储能柜表面和接口， 保持其清洁干燥。

When using the energy storage cabinet, users should follow the instructions in the manual. If any abnormal situation occurs, such as temperature rise, battery deformation, etc., they should stop using it immediately and consult relevant after-sales service personnel. The surface and interface of the energy storage cabinet can be cleaned regularly to keep it clean and dry.

## 6.5 使用 Apply

请按照产品说明书进行正确操作。

Please follow the product manual for correct operation.

## 7. 技术支持与服务 Technical support and services

本规格书中未提及的事宜，请联系我公司共同协商解决。我公司配有专门的技术服务人员， 从售前、售中和售后三个阶段都有专业的技术人员提供全程技术支持与服务，有关产品信息、技术及使用问题可随时与我们取得联系，同时也可以通过登陆我公司网站、邮箱、传真等方式 与我们联系，我们会在收到信息后第一时间给您答复。

For matters not mentioned in this specification, please contact our company for joint consultation. Our company is equipped with dedicated technical service personnel. Professional technicians provide full technical support and services in the three stages of pre-sales, sales and after-sales. You can contact us at any time for product information, technology and usage issues. You can also contact us by logging on to our company's website, email, fax, etc. We will reply to you as soon as we receive the information.